Belt Drive In-Line Centrifugal Exhaust

Model TIB

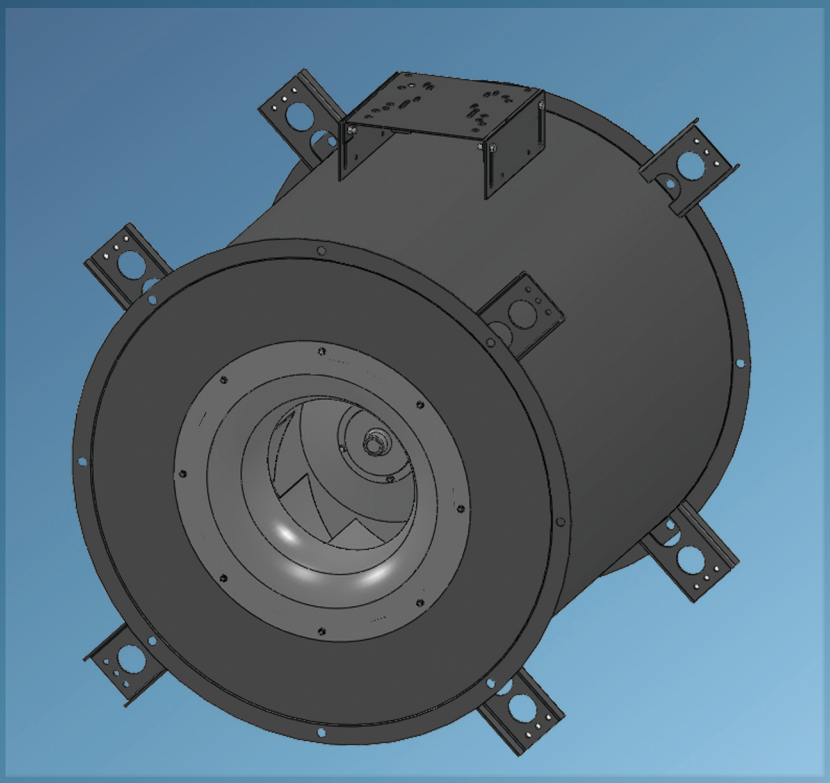

MAX Flow: 19,000 (CFM)
Max SP: 5.75" (in. w.g.)
Max Temp: 200°F

ACME

Est. 1938

ACME ENGINEERING & MANUFACTURING CORPORATION / MUSKOGEE, OKLAHOMA

Quality and Service that will Blow you Away!

Industry Leadership

Founded in 1938, Acme Engineering and Manufacturing Corporation is known worldwide as a leader in the manufacture of fans, blowers, and ventilation equipment. Acme's growth over the past half century is a tribute to superior quality, customer loyalty, and dedicated employees and sales representatives.

Today, from its headquarters in Muskogee, Oklahoma, Acme serves customers worldwide with high quality air movement and control products.

Manufacturing

With approximately 350,000 square feet of manufacturing space, Acme produces one of the broadest lines of air moving equipment in the industry. State-of-the-art manufacturing equipment and a well trained, experienced workforce is the key to Acme's timely delivery of quality air moving products.

Engineering

The Acme Research and Engineering Center operates both air and sound laboratories. The Center houses four wind tunnels with a data acquisition system, a reverberant sound room with the latest sound analyzer equipment, and a structural laboratory for stress and vibration analysis. Solid modeling, and finite element analysis support product research and development. The Center also houses a fully equipped prototype facility enabling Acme to develop and introduce new products to the market in the shortest time possible.

Sales & Service

A factory trained, knowledgeable sales organization addresses the needs of many diverse and distinct markets. Customers around the world are serviced by a complete system of sales representatives, equipment distributors and local dealers supported by nationwide distribution centers and backed by a staff of sales and marketing professionals.

Quality

A highly trained engineering and production staff set the standard for dependable, quality air moving products. By using the latest computer techniques for research and design, and rigorous quality control standards Acme can offer one of the best warranty programs in the industry. Our exclusive 2/5 year limited warranty provides our customers with confidence…Year After Year.

ACME SYMBOL OF QUALITY

Belt Drive Inline Centrifugal Exhauster
Model TIB

Est. 1938

U.L. 705 Listed

Model TIB is a belt drive, centrifugal exhauster with the motor, drives and bearings located outside the airstream. The TIB is designed to operate in any position and is furnished with mounting flanges on both ends for easy installation. Model TIB has a wide range of static pressures.

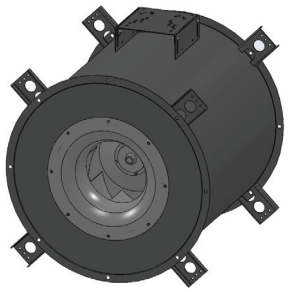

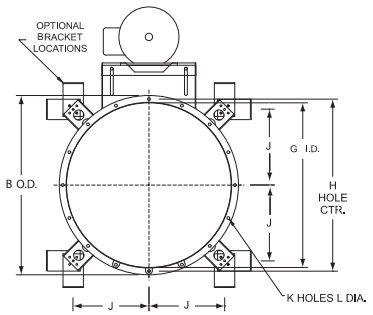

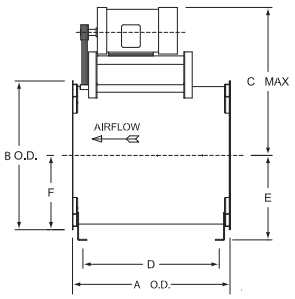

DIMENSIONS											
Fan Model	A	B	C	D	E	F	G	H	J	K	L
TIB80	23	23.38	30	18.91	13.38	11.69	20.19	21.88	10.02	8	0.63
TIB100	23	23.38	30	18.91	13.38	11.69	20.19	21.88	10.02	8	0.63
TIB120	23	23.38	30	18.91	13.38	11.69	20.19	21.88	10.02	8	0.63
TIB135	25	27.75	36	20.91	14.94	13.88	24.56	26.19	11.58	8	0.63
TIB150	27	27.75	36	22.91	14.94	13.88	24.56	26.19	11.58	8	0.63
TIB155	27	27.75	36	22.91	14.94	13.88	24.56	26.19	11.58	8	0.63
TIB160	27	27.75	36	22.91	14.94	13.88	24.56	26.19	11.58	8	0.63
TIB165	27	27.75	36	22.91	14.94	13.88	24.56	26.19	11.58	8	0.63
TIB185	32	33.13	39	27.91	16.85	16.57	29.95	31.57	13.50	16	0.63
TIB200	38	39.56	44	33.91	22.60	19.78	36.34	38.00	16.72	16	0.63
TIB235	41	47.69	51	36.91	25.45	23.85	44.41	46.13	19.57	16	0.63
TIB240	41	47.69	51	36.91	25.45	23.85	44.41	46.13	19.57	16	0.63
TIB245	41	47.69	51	36.91	25.45	23.85	44.41	46.13	19.57	16	0.63
TIB290	48	53.44	54	43.91	27.33	26.72	49.13	51.69	21.42	16	0.75
TIB295	48	53.44	54	43.91	27.33	26.72	49.13	51.69	21.42	16	0.75
TIB300	48	53.44	54	43.91	27.33	26.72	49.13	51.69	21.42	16	0.75
TIB355	55	58.56	57	50.91	32.01	29.28	54.26	56.81	24.58	16	0.75
TIB360	55	58.56	57	50.91	32.01	29.28	54.26	56.81	24.58	16	0.75
TIB365	55	58.56	57	50.91	32.01	29.28	54.26	56.81	24.58	16	0.75

Dimensions are shown in inches.

Acme Engineering & Manufacturing Corporation certifies that the models shown herein are licensed to bear the AMCA seal. The ratings shown are based on tests and procedures performed in accordance with AMCA Publication 211 and AMCA Publication 311 and comply with the requirements of the AMCA Certified Ratings Program.

Standard Construction Features

Housing
- Heavy gauge, rolled steel construction
- Standard charcoal baked enamel finish provides a tough, durable surface

Inlet and Outlet
- Rolled flange at each end for ease of mounting
- Inlet and outlet diameters are identical to accommodate a single duct size

Orifice
- Streamlined, continuously welded, aluminum orifice is optimally matched to the wheel and bolted onto the inlet

Universal Mounting Brackets
- 8 Heavy duty, steel mounting brackets with 4 interchangeable, bolted on mounting feet allow the TIB to be mounted in any position
- Compatible with isolators
- Standard coating is charcoal baked enamel

Fasteners
- Dichromate plated, steel fasteners

Wheel
- Aluminum, centrifugal wheel with backward curved blades
- Non-overloading design for high efficiency and minimal sound
- The dynamically balanced impellers for our products are balanced to the grade G6.3 as described in the standards:
  - ANSI/AMCA 204 “Balance Quality and Vibration Levels for Fans”
  - ISO 14694 “Fans – Specifications for balance quality and vibration levels”

Bearings
- Acme D.S. Pillow Block Bearings are resiliently mounted in neoprene rings and permanently lubricated in a duplex split pillow housing
  - Rated at L_{50} life of 200,000 hours
  - 5 year limited warranty

Shaft
- Corrosion-resistant coated, steel shaft
- Sized so that first critical speed is at least 25% over the max operating speed

Motor
- Continuous duty motors with sealed ball bearings
- Motors are located outside the airstream
- Motors are bolted solid to the mount

Drive Assembly
- Variable pitch drive assembly
- Cast iron drives sized for 150% of fan horsepower
- Static free, oil, and heat-resistant belts

Belt and Bearing Enclosure
- Streamline enclosure virtually eliminates turbulence and air drag
- Bearings are ventilated with outside air for longer life

Disconnect Device
- Standard without disconnect device

Nameplate
- Permanently affixed manufacturer’s nameplate containing the tag information, model number, and serial number, for future identification; CFM and static pressure (inches w.g.) are included when selected through air and sound

Optional Accessories

Disconnect Switch ~~MTD~~
- Nema 3R - Protection from rain, sleet, snow
- Explosion proof switch shipped separate when explosion proof motors are selected

Access Door
- Gasketed, oversized, bolted-on access door for servicing
- Heavy duty steel with charcoal baked enamel finish

Bearings
- Pillow block bearings with external lube fittings
- Rated at L50 life of 200,000 hours
- 2 year limited warranty

Fixed Pitch Drive Assembly
- Cast iron drives sized for 150% of fan horsepower
- Static free, oil, and heat-resistant belts

Spark Resistant Construction
- Constructed to meet AMCA B specifications

Inlet and Outlet Guard
- Galvanized wire

Belt Guard/Motor Cover
- Steel construction with charcoal baked enamel finish
- Removable for access to the motor/drive assembly

Isolators ~~MTD~~
- Hanging Spring (HSI)
- Hanging Rubber (HRI)
- Base Spring (BSI)
- Base Rubber (BRI)

Stainless Steel Tag
- 4” x 2” With model, order number, and tag information

Optional Coatings
- Charcoal Epoxy
- Heresite

~~MTD~~ Not factory mounted, shipped separately

Unless specifically shown as not mounted, option/accessory is mounted.

Performance Data

TIB080 PERFORMANCE DATA

CFM and Sones vs. Static Pressure

RPM	0.000"		0.250"		0.500"		0.750"		1.000"		1.250"		1.500"		1.750"		2.000"		2.250"		2.500"		2.750"		3.000"		3.250"		3.500"		3.750"		4.000"		4.250"		4.500"		4.750"		5.000"	
	BHP	Sone	BHP	Sone	BHP	Sone	BHP	Sone	BHP	Sone	BHP	Sone	BHP	Sone	BHP	Sone	BHP	Sone	BHP	Sone	BHP	Sone	BHP	Sone	BHP	Sone	BHP	Sone	BHP	Sone	BHP	Sone	BHP	Sone	BHP	Sone	BHP	Sone	BHP	Sone	BHP	Sone
1421	345		286		225		98																																			
	0.05	5.40	0.06	5.50	0.07	5.30	0.07	5.70																																		
1790	434		387		342		295		223		78																															
	0.11	7.90	0.12	8.30	0.13	8.00	0.13	7.60	0.14	8.90	0.13	7.80																														
2286	555		517		481		446		409		371		315		258		123																									
	0.22	13.00	0.24	19.10	0.25	13.40	0.26	12.80	0.27	12.40	0.28	12.10	0.28	13.60	0.29	14.30	0.27	12.80																										
2508	609		574		541		509		476		443		408		357		305		220		84																					
	0.29	14.90	0.31	27	0.32	15.20	0.34	15.20	0.35	14.50	0.36	14.20	0.37	13.80	0.37	15.40	0.38	16.20	0.37	16.00	0.34	13.30																						
2880	699		668		640		611		583		555		526		497		465		420		375		330		237		119															
	0.44	18.10	0.46	42	0.48	18.80	0.50	18.70	0.51	18.60	0.52	17.90	0.54	17.70	0.55	17.30	0.56	17.20	0.56	18.70	0.57	19.50	0.57	20	0.56	19.40	0.53	17.10																
3297	800		774		748		723		698		674		649		624		599		573		547		512		473		433		394		346		243		140							
	0.66	22	0.68	60	0.70	34	0.73	22	0.74	23	0.76	23	0.78	22	0.79	22	0.81	22	0.82	21	0.83	21	0.84	22	0.85	23	0.85	24	0.86	24	0.86	25	0.82	23	0.79	21						

TIB100 PERFORMANCE DATA

CFM and Sones vs. Static Pressure

RPM	0.000"		0.250"		0.500"		0.750"		1.000"		1.250"		1.500"		1.750"		2.000"		2.250"		2.500"		2.750"		3.000"		3.250"		3.500"		3.750"		4.000"		4.250"		4.500"		4.750"		5.000"	
	BHP	Sone	BHP	Sone	BHP	Sone	BHP	Sone	BHP	Sone	BHP	Sone	BHP	Sone	BHP	Sone	BHP	Sone	BHP	Sone	BHP	Sone	BHP	Sone	BHP	Sone	BHP	Sone	BHP	Sone	BHP	Sone	BHP	Sone	BHP	Sone	BHP	Sone	BHP	Sone	BHP	Sone
1189	573		489		313																																					
	0.05	4.70	0.06	4.60	0.07	5.00																																				
1497	721		658		569		428																																			
	0.09	6.70	0.11	7.60	0.13	7.00	0.14	7.40																																		
1913	921		878		820		749		657		536																															
	0.19	11.10	0.22	19.20	0.24	10.40	0.27	10.90	0.28	10.70	0.29	11.70																														
2098	1011		972		920		870		793		701		589		441																											
	0.25	13.10	0.28	25	0.31	13.70	0.33	12.60	0.36	12.80	0.37	12.50	0.38	13.70	0.37	14.50																										
2410	1161		1127		1088		1040		998		928		855		767		667		536																							
	0.38	15.90	0.42	33	0.45	23	0.49	14.80	0.51	15.60	0.54	15.80	0.56	15.60	0.57	16.00	0.57	17.10	0.57	17.90																						
2758	1329		1299		1270		1230		1187		1151		1094		1037		969		892		803		699		591																	
	0.57	19.20	0.61	42	0.66	34	0.70	24	0.73	18.50	0.76	19.20	0.79	19.50	0.82	19.50	0.84	19.10	0.85	19.50	0.86	21	0.85	22	0.85	22																

TIB120 PERFORMANCE DATA

CFM and Sones vs. Static Pressure

RPM	0.000"		0.250"		0.500"		0.750"		1.000"		1.250"		1.500"		1.750"		2.000"		2.250"		2.500"		2.750"		3.000"		3.250"		3.500"		3.750"		4.000"		4.250"		4.500"		4.750"		5.000"	
	BHP	Sone	BHP	Sone	BHP	Sone	BHP	Sone	BHP	Sone	BHP	Sone	BHP	Sone	BHP	Sone	BHP	Sone	BHP	Sone	BHP	Sone	BHP	Sone	BHP	Sone	BHP	Sone	BHP	Sone	BHP	Sone	BHP	Sone	BHP	Sone	BHP	Sone	BHP	Sone	BHP	Sone
1001	870		652																																							
	0.04	4.60	0.06	4.40																																						
1261	1097		925		741																																					
	0.09	6.90	0.11	7.30	0.13	7.20																																				
1610	1401		1264		1126		991		764																																	
	0.19	11.00	0.22	13.40	0.24	11.30	0.26	11.00	0.26	11.20																																
1766	1537		1412		1291		1165		1026		791																															
	0.25	13.40	0.28	17.70	0.31	13.60	0.33	13.20	0.35	13.40	0.34	13.70																														
2029	1766		1657		1552		1440		1334		1217		1037																													
	0.37	16.90	0.42	24	0.45	17.50	0.48	17.40	0.50	16.90	0.52	17.10	0.53	17.40																												
2322	2021		1926		1831		1742		1640		1549		1453		1338		1162																									
	0.56	21	0.61	32	0.66	26	0.69	22	0.72	22	0.75	21	0.78	21	0.79	22	0.79	22																								

Performance certified is for installation type B: Free inlet, Ducted outlet. Power rating (BHP) does not include transmission losses. Performance ratings do not include the effects of appurtenances (accessories).

The sound ratings shown are loudness values in hemispherical sones at 1.5 m (5 ft) in a hemispherical free field calculated per AMCA Standard 301. Values are shown for: Installation Type B: free inlet hemispherical sone levels.

Performance Data

TIB135 PERFORMANCE DATA

CFM and Sones vs. Static Pressure

RPM	0.000"		0.250"		0.500"		0.750"		1.000"		1.250"		1.500"		1.750"		2.000"		2.250"		2.500"		2.750"		3.000"		3.250"		3.500"		3.750"		4.000"		4.250"		4.500"		4.750"		5.000"	
	BHP	Sone	BHP	Sone	BHP	Sone	BHP	Sone	BHP	Sone	BHP	Sone	BHP	Sone	BHP	Sone	BHP	Sone	BHP	Sone	BHP	Sone	BHP	Sone	BHP	Sone	BHP	Sone	BHP	Sone	BHP	Sone	BHP	Sone	BHP	Sone	BHP	Sone	BHP	Sone	BHP	Sone
818	1105		742																																							
	0.05	2.30	0.07	3.40																																						
1030	1392		1142		675																																					
	0.10	3.80	0.12	6.00	0.13	5.80																																				
1316	1779		1597		1374		1033																																			
	0.20	6.00	0.24	12.30	0.27	9.90	0.29	9.10																																		
1443	1951		1772		1591		1339		902																																	
	0.26	7.10	0.30	13.60	0.34	10.90	0.37	10.20	0.36	10.70																																
1658	2242		2066		1952		1760		1529		1180																															
	0.40	9.00	0.45	16.60	0.49	12.80	0.52	14.40	0.56	13.30	0.56	13.90																														
1898	2567		2390		2309		2179		2005		1801		1575		1151																											
	0.60	11.60	0.65	21	0.71	23	0.76	17.10	0.79	18.60	0.84	19.80	0.86	17.50	0.82	17.40																										

TIB150 PERFORMANCE DATA

CFM and Sones vs. Static Pressure

RPM	0.000"		0.250"		0.500"		0.750"		1.000"		1.250"		1.500"		1.750"		2.000"		2.250"		2.500"		2.750"		3.000"		3.250"		3.500"		3.750"		4.000"		4.250"		4.500"		4.750"		5.000"	
	BHP	Sone	BHP	Sone	BHP	Sone	BHP	Sone	BHP	Sone	BHP	Sone	BHP	Sone	BHP	Sone	BHP	Sone	BHP	Sone	BHP	Sone	BHP	Sone	BHP	Sone	BHP	Sone	BHP	Sone	BHP	Sone	BHP	Sone	BHP	Sone	BHP	Sone	BHP	Sone	BHP	Sone
1113	2095		1831		1594		978																																			
	0.22	7.40	0.26	9.80	0.28	9.10	0.26	8.60																																		
1221	2298		2064		1861		1533																																			
	0.30	8.90	0.34	11.60	0.36	11.20	0.38	10.30																																		
1403	2641		2438		2212		2059		1746		741																															
	0.45	11.30	0.50	15.30	0.54	14.40	0.56	14.00	0.57	13.20	0.41	11.70																														
1606	3023		2846		2660		2492		2340		2084		1666																													
	0.68	14.10	0.74	20	0.78	18.50	0.81	18.00	0.84	17.60	0.86	16.80	0.83	16.70																												
1741	3278		3114		2949		2760		2659		2470		2219		1838																											
	0.86	16.20	0.93	23	0.98	21	1.02	21	1.05	20	1.08	19.60	1.10	19.20	1.07	19.10																										
1993	3752		3610		3465		3314		3148		3063		2935		2736		2500		2188		1260																					
	1.29	20	1.37	29	1.44	27	1.49	26	1.53	26	1.57	25	1.61	25	1.64	24	1.64	24	1.62	24	1.29	22																				

TIB155 PERFORMANCE DATA

CFM and Sones vs. Static Pressure

RPM	0.000"		0.250"		0.500"		0.750"		1.000"		1.250"		1.500"		1.750"		2.000"		2.250"		2.500"		2.750"		3.000"		3.250"		3.500"		3.750"		4.000"		4.250"		4.500"		4.750"		5.000"	
	BHP	Sone	BHP	Sone	BHP	Sone	BHP	Sone	BHP	Sone	BHP	Sone	BHP	Sone	BHP	Sone	BHP	Sone	BHP	Sone	BHP	Sone	BHP	Sone	BHP	Sone	BHP	Sone	BHP	Sone	BHP	Sone	BHP	Sone	BHP	Sone	BHP	Sone	BHP	Sone	BHP	Sone
1471	969		911		853		789		708		610		458																													
	0.18	6.60	0.21	9.50	0.23	14.00	0.25	17.00	0.27	19.20	0.29	21	0.28	21																												
1613	1062		1008		955		902		838		762		671		532																											
	0.24	7.90	0.27	11.30	0.30	14.80	0.32	18.30	0.34	21	0.36	23	0.38	24	0.37	25																										
1853	1220		1171		1128		1082		1034		979		916		848		761		640		518																					
	0.37	10.20	0.40	14.80	0.43	15.90	0.46	20	0.49	24	0.51	26	0.54	29	0.56	30	0.57	32	0.56	33	0.56	33																				
2121	1397		1351		1316		1275		1236		1194		1149		1098		1040		981		922		816		710		604															
	0.55	13.50	0.58	19.90	0.62	18.70	0.66	23	0.69	27	0.72	30	0.75	33	0.78	36	0.81	38	0.83	40	0.86	42	0.85	43	0.84	43	0.83	43														
2300	1515		1471		1438		1403		1365		1330		1290		1249		1202		1150		1096		1041		976		879		781		683		585									
	0.70	15.50	0.74	23	0.78	22	0.82	23	0.86	28	0.90	32	0.93	35	0.96	38	0.98	41	1.02	43	1.05	45	1.08	47	1.10	49	1.09	49	1.08	50	1.07	50	1.06	50								
2633	1734		1693		1664		1636		1604		1570		1539		1509		1472		1437		1396		1354		1307		1259		1212		1164		1094		1009		923		838		753	
	1.05	18.40	1.09	26	1.14	26	1.19	25	1.24	28	1.28	32	1.32	36	1.36	40	1.40	42	1.43	45	1.46	48	1.50	50	1.53	52	1.57	54	1.60	56	1.64	58	1.64	59	1.63	60	1.62	60	1.61	60	1.60	60

Performance certified is for installation type B: Free inlet, Ducted outlet. Power rating (BHP) does not include transmission losses. Performance ratings do not include the effects of appurtenances (accessories).

The sound ratings shown are loudness values in hemispherical sones at 1.5 m (5 ft) in a hemispherical free field calculated per AMCA Standard 301. Values are shown for: Installation Type B: free inlet hemispherical sone levels.

Performance Data

TIB160 PERFORMANCE DATA

CFM and Sones vs. Static Pressure

RPM	0.000"		0.250"		0.500"		0.750"		1.000"		1.250"		1.500"		1.750"		2.000"		2.250"		2.500"		2.750"		3.000"		3.250"		3.500"		3.750"		4.000"		4.250"		4.500"		4.750"		5.000"	
	BHP	Sone	BHP	Sone	BHP	Sone	BHP	Sone	BHP	Sone	BHP	Sone	BHP	Sone	BHP	Sone	BHP	Sone	BHP	Sone	BHP	Sone	BHP	Sone	BHP	Sone	BHP	Sone	BHP	Sone	BHP	Sone	BHP	Sone	BHP	Sone	BHP	Sone	BHP	Sone	BHP	Sone
1180	1635		1524		1389		1196																																			
	0.17	5.60	0.22	7.20	0.26	7.50	0.28	9.70																																		
1294	1793		1692		1579		1423		1229																																	
	0.23	6.50	0.28	8.40	0.32	7.80	0.36	10.20	0.38	11.80																																
1486	2059		1971		1880		1771		1628		1464		1220																													
	0.34	8.20	0.40	11.20	0.46	10.50	0.51	10.60	0.54	13.10	0.57	14.70	0.57	15.60																												
1701	2357		2280		2203		2120		2021		1896		1760		1599		1364																									
	0.51	10.20	0.58	13.80	0.65	13.30	0.71	13.00	0.76	13.40	0.81	15.90	0.84	17.50	0.86	18.70	0.86	19.50																								
1845	2557		2485		2415		2340		2257		2159		2042		1917		1772		1569																							
	0.65	11.70	0.73	16.10	0.80	15.50	0.87	15.20	0.93	14.20	0.99	16.10	1.03	18.10	1.08	19.80	1.10	21	1.09	22																						
2112	2927		2864		2803		2740		2674		2603		2522		2428		2322		2214		2093		1946		1757																	
	0.98	14.80	1.07	21	1.15	20	1.23	19.30	1.31	19.10	1.38	18.20	1.45	18.70	1.51	21	1.56	23	1.61	25	1.64	26	1.65	27	1.64	28																

TIB165 PERFORMANCE DATA

CFM and Sones vs. Static Pressure

RPM	0.000"		0.250"		0.500"		0.750"		1.000"		1.250"		1.500"		1.750"		2.000"		2.250"		2.500"		2.750"		3.000"		3.250"		3.500"		3.750"		4.000"		4.250"		4.500"		4.750"		5.000"	
	BHP	Sone	BHP	Sone	BHP	Sone	BHP	Sone	BHP	Sone	BHP	Sone	BHP	Sone	BHP	Sone	BHP	Sone	BHP	Sone	BHP	Sone	BHP	Sone	BHP	Sone	BHP	Sone	BHP	Sone	BHP	Sone	BHP	Sone	BHP	Sone	BHP	Sone	BHP	Sone	BHP	Sone
958	2357		2048		1631																																					
	0.22	4.80	0.26	6.10	0.29	5.80																																				
1051	2586		2312		1972		1309																																			
	0.30	5.70	0.34	7.00	0.37	6.80	0.34	6.60																																		
1207	2971		2741		2464		2126		1430																																	
	0.45	7.20	0.50	10.90	0.54	10.00	0.57	9.10	0.50	8.60																																
1382	3402		3199		2974		2725		2410		1991																															
	0.68	9.20	0.73	13.70	0.79	12.40	0.83	13.30	0.86	11.80	0.84	11.40																														
1499	3690		3501		3305		3080		2831		2517		2007																													
	0.86	10.70	0.92	15.60	0.99	13.60	1.04	14.90	1.08	13.30	1.10	13.60	1.03	12.70																												
1715	4222		4056		3898		3706		3508		3294		3037		2748		2122																									
	1.29	13.50	1.36	19.10	1.43	20	1.50	17.70	1.56	18.60	1.61	19.50	1.64	17.00	1.65	17.00	1.47	16.20																								

TIB185 PERFORMANCE DATA

CFM and Sones vs. Static Pressure

RPM	0.000"		0.250"		0.500"		0.750"		1.000"		1.250"		1.500"		1.750"		2.000"		2.250"		2.500"		2.750"		3.000"		3.250"		3.500"		3.750"		4.000"		4.250"		4.500"		4.750"		5.000"	
	BHP	Sone	BHP	Sone	BHP	Sone	BHP	Sone	BHP	Sone	BHP	Sone	BHP	Sone	BHP	Sone	BHP	Sone	BHP	Sone	BHP	Sone	BHP	Sone	BHP	Sone	BHP	Sone	BHP	Sone	BHP	Sone	BHP	Sone	BHP	Sone	BHP	Sone	BHP	Sone	BHP	Sone
803	2795		2390		1930																																					
	0.19	2.60	0.24	5.60	0.28	5.20																																				
881	3067		2693		2321		1393																																			
	0.25	3.10	0.31	6.80	0.36	6.60	0.33	6.40																																		
1012	3524		3199		2887		2524		1526																																	
	0.38	4.70	0.45	9.60	0.51	9.50	0.56	9.00	0.50	8.70																																
1158	4033		3750		3467		3198		2856		2117																															
	0.56	6.20	0.64	12.10	0.72	12.30	0.79	11.70	0.84	11.40	0.80	11.20																														
1256	4374		4111		3848		3603		3329		2973		2127																													
	0.72	7.00	0.81	13.50	0.89	13.90	0.97	13.70	1.04	13.00	1.09	12.70	0.99	12.60																												
1437	5005		4771		4547		4320		4106		3870		3602		3234		2249																									
	1.08	8.70	1.18	15.70	1.28	17.10	1.36	17.10	1.46	16.80	1.54	16.20	1.61	16.10	1.64	15.60	1.44	15.60																								
1582	5510		5297		5098		4883		4685		4491		4274		4038		3722		3271																							
	1.43	10.30	1.55	17.80	1.66	19.90	1.76	19.80	1.86	20	1.96	19.60	2.05	18.90	2.13	18.90	2.17	18.50	2.15	18.10																						
1811	6308		6121		5941		5765		5577		5404		5235		5066		4865		4658		4402		4110		3540																	
	2.15	12.90	2.28	21	2.41	24	2.53	25	2.64	25	2.76	25	2.88	25	2.99	24	3.09	24	3.18	24	3.24	24	3.28	23	3.15	23																

Performance certified is for installation type B: Free inlet, Ducted outlet. Power rating (BHP) does not include transmission losses. Performance ratings do not include the effects of appurtenances (accessories).

The sound ratings shown are loudness values in hemispherical sones at 1.5 m (5 ft) in a hemispherical free field calculated per AMCA Standard 301. Values are shown for: Installation Type B: free inlet hemispherical sone levels.

Performance Data

TIB200 PERFORMANCE DATA

CFM and Sones vs. Static Pressure

RPM	0.000"		0.250"		0.500"		0.750"		1.000"		1.250"		1.500"		1.750"		2.000"		2.250"		2.500"		2.750"		3.000"		3.250"		3.500"	
	BHP	Sone	BHP	Sone	BHP	Sone	BHP	Sone	BHP	Sone	BHP	Sone	BHP	Sone	BHP	Sone	BHP	Sone	BHP	Sone	BHP	Sone	BHP	Sone	BHP	Sone	BHP	Sone	BHP	Sone
725	3219		2652		1980																									
	0.19	1.80	0.26	6.20	0.29	6.70																								
795	3530		3023		2445																									
	0.25	2.20	0.33	7.00	0.37	7.70																								
913	4055		3644		3140		2609																							
	0.38	2.90	0.47	8.40	0.53	9.50	0.57	9.80																						
1046	4646		4300		3859		3432		2957		2162																			
	0.58	3.80	0.69	10.20	0.76	11.50	0.82	12.30	0.86	12.50	0.82	12.60																		
1134	5037		4718		4327		3933		3518		3036		2217																	
	0.74	4.50	0.86	11.40	0.94	12.80	1.01	13.80	1.07	14.20	1.10	14.60	1.03	14.40																
1298	5766		5478		5189		4815		4478		4120		3734		3251															
	1.11	5.90	1.26	13.50	1.36	15.30	1.44	16.50	1.52	17.40	1.60	17.80	1.64	17.90	1.65	18.40														
1429	6348		6072		5840		5515		5192		4883		4556		4206		3798		3226											
	1.48	6.90	1.66	15.00	1.77	17.30	1.88	18.30	1.96	19.50	2.05	20	2.12	20	2.18	20	2.20	21	2.15	21										
1635	7264		6999		6820		6587		6288		6002		5735		5460		5169		4863		4533		4138		3535					
	2.21	8.50	2.44	17.30	2.58	20	2.70	22	2.82	22	2.91	24	3.01	25	3.11	25	3.19	25	3.25	25	3.30	26	3.30	26	3.18	26				

TIB235 PERFORMANCE DATA

CFM and Sones vs. Static Pressure

RPM	0.000"		0.250"		0.500"		0.750"		1.000"		1.250"		1.500"		1.750"		2.000"		2.250"		2.500"		2.750"		3.000"		3.250"		3.500"		3.750"		4.000"		4.250"		4.500"		4.750"		5.000"	
	BHP	Sone	BHP	Sone	BHP	Sone	BHP	Sone	BHP	Sone	BHP	Sone	BHP	Sone	BHP	Sone	BHP	Sone	BHP	Sone	BHP	Sone	BHP	Sone	BHP	Sone	BHP	Sone	BHP	Sone	BHP	Sone	BHP	Sone	BHP	Sone	BHP	Sone	BHP	Sone	BHP	Sone
845	1882		1759		1613		1411		1141																																	
	0.24	1.50	0.29	9.30	0.33	9.40	0.36	9.30	0.38	10.70																																
970	2161		2056		1935		1795		1611		1375																															
	0.36	2.10	0.42	11.30	0.47	12.00	0.52	12.00	0.55	11.90	0.56	13.40																														
1111	2475		2384		2283		2176		2046		1888		1692		1483																											
	0.54	2.90	0.61	15.50	0.67	15.30	0.73	15.40	0.78	15.20	0.82	15.00	0.84	16.40	0.85	17.40																										
1205	2685		2601		2512		2413		2308		2181		2029		1847		1654		1461																							
	0.69	3.50	0.77	18.30	0.84	17.50	0.90	17.70	0.96	17.90	1.01	17.60	1.05	17.40	1.07	18.90	1.09	19.90	1.10	21																						
1379	3073		3000		2925		2841		2755		2664		2558		2444		2302		2141		1973		1804		1636																	
	1.04	4.40	1.14	22	1.21	20	1.28	21	1.36	22	1.43	22	1.48	21	1.54	21	1.58	21	1.61	23	1.62	24	1.64	24	1.65	25																
1518	3382		3317		3249		3178		3098		3021		2938		2844		2741		2623		2494		2343		2190		2037		1883													
	1.38	5.20	1.49	25	1.58	25	1.66	24	1.74	25	1.82	25	1.90	25	1.96	24	2.02	24	2.08	24	2.13	25	2.14	26	2.16	27	2.18	28	2.19	28												
1738	3873		3815		3757		3697		3634		3564		3496		3429		3353		3272		3182		3091		2981		2868		2738		2605		2471		2337		2203		2070			
	2.07	6.40	2.20	30	2.31	32	2.40	29	2.49	30	2.59	30	2.69	30	2.78	30	2.86	30	2.93	30	2.99	30	3.07	30	3.13	30	3.18	30	3.21	32	3.23	33	3.25	34	3.26	34	3.28	35	3.30	35		

TIB240 PERFORMANCE DATA

CFM and Sones vs. Static Pressure

RPM	0.000"		0.250"		0.500"		0.750"		1.000"		1.250"		1.500"		1.750"		2.000"		2.250"		2.500"		2.750"		3.000"		3.250"		3.500"		3.750"		4.000"		4.250"		4.500"		4.750"		5.000"	
	BHP	Sone	BHP	Sone	BHP	Sone	BHP	Sone	BHP	Sone	BHP	Sone	BHP	Sone	BHP	Sone	BHP	Sone	BHP	Sone	BHP	Sone	BHP	Sone	BHP	Sone	BHP	Sone	BHP	Sone	BHP	Sone	BHP	Sone	BHP	Sone	BHP	Sone	BHP	Sone	BHP	Sone
682	3177		2866		2441		1737																																			
	0.21	0.80	0.30	5.90	0.36	6.50	0.38	6.70																																		
783	3648		3382		3068		2607		1949																																	
	0.32	1.20	0.42	7.00	0.51	7.90	0.56	8.20	0.57	8.30																																
896	4174		3942		3691		3389		2949		2430																															
	0.48	1.70	0.60	8.60	0.70	9.50	0.79	10.10	0.84	10.30	0.86	10.60																														
972	4529		4314		4092		3833		3507		3074		2549																													
	0.61	2.10	0.74	9.70	0.86	10.60	0.96	11.40	1.04	11.80	1.08	11.90	1.09	12.10																												
1113	5186		5001		4812		4603		4372		4108		3728		3358		2827																									
	0.91	2.90	1.08	11.50	1.21	12.90	1.34	14.00	1.45	14.50	1.54	14.90	1.59	15.00	1.65	15.20	1.63	15.20																										
1225	5708		5544		5367		5193		4994		4776		4541		4196		3855		3473		2886																					
	1.21	3.60	1.40	13.10	1.55	14.90	1.70	15.80	1.83	16.70	1.95	17.20	2.05	17.60	2.11	17.70	2.17	17.70	2.20	18.00	2.13	17.80																						
1402	6533		6396		6234		6087		5931		5757		5577		5374		5155		4854		4552		4261		3894		3374															
	1.82	4.60	2.05	14.70	2.22	17.60	2.39	18.40	2.55	19.20	2.71	20	2.85	21	2.97	21	3.09	21	3.15	21	3.21	21	3.29	22	3.30	22	3.22	22																

Performance certified is for installation type B: Free inlet, Ducted outlet. Power rating (BHP) does not include transmission losses. Performance ratings do not include the effects of appurtenances (accessories).

The sound ratings shown are loudness values in hemispherical sones at 1.5 m (5 ft) in a hemispherical free field calculated per AMCA Standard 301. Values are shown for: Installation Type B: free inlet hemispherical sone levels.

Performance Data

TIB245 PERFORMANCE DATA

CFM and Sones vs. Static Pressure

RPM	0.000"		0.250"		0.500"		0.750"		1.000"		1.250"		1.500"		1.750"		2.000"		2.250"		2.500"	
	BHP	Sone	BHP	Sone	BHP	Sone	BHP	Sone	BHP	Sone	BHP	Sone	BHP	Sone	BHP	Sone	BHP	Sone	BHP	Sone	BHP	Sone
569	4596		3759		2699																	
	0.26	0.70	0.35	5.50	0.38	6.40																
653	5276		4554		3733		2338															
	0.39	1.30	0.50	6.50	0.56	7.70	0.52	8.00														
748	6044		5425		4744		3977		2325													
	0.59	1.80	0.72	7.40	0.81	9.00	0.85	9.90	0.74	9.80												
811	6553		5985		5379		4696		3923													
	0.75	2.20	0.90	8.10	1.00	9.90	1.07	10.90	1.10	11.70												
929	7507		7016		6492		5942		5340		4693		3647									
	1.13	3.00	1.31	9.30	1.44	11.60	1.54	12.90	1.61	13.90	1.65	14.60	1.58	15.00								
1022	8259		7810		7347		6873		6339		5786		5194		4317							
	1.51	3.70	1.71	10.40	1.86	12.90	1.99	14.50	2.08	15.50	2.15	16.30	2.19	17.10	2.14	17.70						
1170	9456		9059		8668		8249		7836		7371		6895		6399		5874		5090			
	2.26	5.00	2.50	12.20	2.68	15.30	2.85	17.20	2.99	18.50	3.09	19.30	3.18	20	3.25	21	3.29	22	3.22	23		

TIB290 PERFORMANCE DATA

CFM and Sones vs. Static Pressure

RPM	0.000"		0.250"		0.500"		0.750"		1.000"		1.250"		1.500"		1.750"		2.000"		2.250"		2.500"		2.750"		3.000"		3.250"		3.500"		3.750"		4.000"		4.250"		4.500"		4.750"		5.000"		5.250"		5.500"		5.750"	
	BHP	Sone	BHP	Sone	BHP	Sone	BHP	Sone	BHP	Sone	BHP	Sone	BHP	Sone	BHP	Sone	BHP	Sone	BHP	Sone	BHP	Sone	BHP	Sone	BHP	Sone	BHP	Sone	BHP	Sone	BHP	Sone	BHP	Sone	BHP	Sone	BHP	Sone	BHP	Sone	BHP	Sone	BHP	Sone	BHP	Sone	BHP	Sone
840	3166		2947		2747		2517		2244		1897		1503																																			
	0.54	16.00	0.63	32	0.71	15.00	0.77	14.40	0.82	14.30	0.86	14.30	0.86	14.90																																		
911	3434		3229		3045		2843		2615		2340		2014		1650																																		
	0.69	18.10	0.79	43	0.88	17.10	0.95	16.70	1.01	16.10	1.06	16.40	1.09	16.40	1.10	16.90																																
1042	3928		3749		3581		3421		3238		3040		2829		2555		2255		1938		1521																											
	1.03	22	1.15	65	1.25	33	1.34	21	1.42	21	1.50	19.70	1.57	20	1.61	20	1.64	20	1.65	21	1.59	21																										
1147	4324		4161		4004		3858		3706		3539		3357		3167		2929		2683		2394		2106		1723																							
	1.38	26	1.51	84	1.63	50	1.73	27	1.83	24	1.91	24	2.00	23	2.07	23	2.13	23	2.18	23	2.19	24	2.20	24	2.13	24																						
1313	4949		4807		4665		4535		4408		4278		4132		3986		3820		3654		3456		3244		3019		2767		2515		2235																	
	2.06	32	2.21	116	2.36	84	2.48	53	2.60	33	2.72	30	2.82	30	2.91	29	3.01	29	3.09	29	3.16	29	3.22	29	3.27	29	3.28	29	3.29	30	3.27	30																
1557	5869		5750		5630		5509		5401		5294		5187		5077		4954		4831		4707		4566		4425		4284		4110		3930		3752		3553		3341		3128		2916		2679		2373			
	3.44	42	3.62	162	3.79	147	3.97	111	4.11	79	4.25	55	4.39	40	4.53	40	4.64	40	4.76	40	4.88	39	4.99	38	5.09	39	5.19	39	5.27	39	5.34	39	5.41	38	5.45	38	5.46	39	5.48	39	5.49	39	5.47	40	5.34	39		

TIB295 PERFORMANCE DATA

CFM and Sones vs. Static Pressure

RPM	0.000"		0.250"		0.500"		0.750"		1.000"		1.250"		1.500"		1.750"		2.000"		2.250"		2.500"		2.750"		3.000"		3.250"		3.500"		3.750"		4.000"		4.250"		4.500"		4.750"		5.000"		5.250"		5.500"		5.750"	
	BHP	Sone	BHP	Sone	BHP	Sone	BHP	Sone	BHP	Sone	BHP	Sone	BHP	Sone	BHP	Sone	BHP	Sone	BHP	Sone	BHP	Sone	BHP	Sone	BHP	Sone	BHP	Sone	BHP	Sone	BHP	Sone	BHP	Sone	BHP	Sone	BHP	Sone	BHP	Sone	BHP	Sone	BHP	Sone	BHP	Sone	BHP	Sone
656	5581		5144		4624		3905		2700																																							
	0.49	12.30	0.64	12.10	0.76	11.80	0.84	11.80	0.83	12.40																																						
712	6058		5660		5199		4624		3825		2221																																						
	0.63	14.20	0.79	16.10	0.93	13.90	1.04	13.50	1.10	13.90	0.96	13.60																																				
815	6934		6596		6206		5791		5251		4566		3629																																				
	0.94	18.20	1.12	25	1.30	17.80	1.45	17.10	1.56	17.00	1.64	17.10	1.63	17.70																																		
897	7632		7332		6986		6615		6196		5695		5066		4265		2577																															
	1.26	21	1.46	31	1.66	20	1.83	20	1.98	19.40	2.10	19.70	2.18	19.70	2.19	20	1.86	19.30																														
1026	8730		8479		8179		7867		7542		7186		6763		6296		5702		5018		3930																											
	1.88	26	2.11	44	2.34	30	2.56	26	2.75	25	2.93	24	3.08	24	3.20	25	3.27	25	3.28	26	3.11	25																										
1217	10356		10149		9908		9655		9392		9119		8844		8536		8180		7809		7408		6896		6374		5701		4742																			
	3.14	34	3.40	62	3.68	52	3.96	38	4.22	34	4.45	34	4.68	33	4.88	32	5.06	32	5.22	32	5.36	33	5.45	33	5.49	34	5.46	34	5.22	34																		

Performance certified is for installation type B: Free inlet, Ducted outlet. Power rating (BHP) does not include transmission losses. Performance ratings do not include the effects of appurtenances (accessories).

The sound ratings shown are loudness values in hemispherical sones at 1.5 m (5 ft) in a hemispherical free field calculated per AMCA Standard 301. Values are shown for: Installation Type B: free inlet hemispherical sone levels.

Performance Data

TIB300 PERFORMANCE DATA

CFM and Sones vs. Static Pressure

RPM	0.000"		0.250"		0.500"		0.750"		1.000"		1.250"		1.500"		1.750"		2.000"		2.250"		2.500"		2.750"		3.000"		3.250"		3.500"		3.750"		4.000"		4.250"		4.500"		4.750"		5.000"		5.250"		5.500"		5.750"	
	BHP	Sone	BHP	Sone	BHP	Sone	BHP	Sone	BHP	Sone	BHP	Sone	BHP	Sone	BHP	Sone	BHP	Sone	BHP	Sone	BHP	Sone	BHP	Sone	BHP	Sone	BHP	Sone	BHP	Sone	BHP	Sone	BHP	Sone	BHP	Sone	BHP	Sone	BHP	Sone	BHP	Sone	BHP	Sone	BHP	Sone	BHP	Sone	BHP	Sone
544	7175		6233		5252		1896																																											
	0.61	13.00	0.72	12.70	0.84	11.70	0.56	9.80																																										
590	7783		6906		6061		4746																																											
	0.77	15.00	0.90	14.50	1.04	13.90	1.09	13.00																																										
675	8905		8123		7422		6592		5278																																										
	1.16	18.50	1.30	21	1.46	17.80	1.60	16.90	1.62	16.30																																								
743	9803		9088		8428		7770		6940		5518																																							
	1.54	22	1.70	27	1.87	21	2.04	20	2.17	19.20	2.14	19.00																																						
851	11229		10600		10007		9452		8855		8136		7208		5374																																				
	2.32	27	2.49	37	2.69	26	2.89	26	3.08	25	3.23	24	3.29	23	3.03	24																																		
1009	13314		12779		12260		11774		11305		10856		10277		9665		8949		7803		5980																													
	3.86	37	4.06	53	4.30	45	4.52	35	4.76	35	5.02	34	5.21	33	5.38	32	5.48	31	5.41	31	4.91	31																												

TIB355 PERFORMANCE DATA

CFM and Sones vs. Static Pressure

RPM	0.000"		0.250"		0.500"		0.750"		1.000"		1.250"		1.500"		1.750"		2.000"		2.250"		2.500"		2.750"		3.000"		3.250"		3.500"		3.750"		4.000"		4.250"		4.500"		4.750"		5.000"		5.250"		5.500"		5.750"	
	BHP	Sone	BHP	Sone	BHP	Sone	BHP	Sone	BHP	Sone	BHP	Sone	BHP	Sone	BHP	Sone	BHP	Sone	BHP	Sone	BHP	Sone	BHP	Sone	BHP	Sone	BHP	Sone	BHP	Sone	BHP	Sone	BHP	Sone	BHP	Sone	BHP	Sone	BHP	Sone	BHP	Sone	BHP	Sone	BHP	Sone	BHP	Sone	BHP	Sone
620	4022		3738		3387		2987		2513		1988																																							
	0.50	13.30	0.62	22	0.71	13.20	0.79	12.90	0.84	12.70	0.86	13.10																																						
673	4366		4113		3781		3444		3061		2590		2085																																						
	0.64	15.50	0.77	30	0.87	15.20	0.97	15.10	1.04	15.00	1.08	14.70	1.10	15.00																																				
770	4995		4765		4505		4228		3916		3583		3191		2751		2210																																	
	0.96	20	1.11	50	1.23	22	1.35	19.70	1.46	19.20	1.55	19.10	1.60	18.80	1.63	18.80	1.61	18.80																																		
847	5495		5278		5070		4798		4556		4261		3957		3607		3225		2871		2108																													
	1.28	24	1.45	67	1.58	36	1.72	23	1.84	23	1.96	22	2.05	22	2.12	22	2.16	22	2.20	22	2.04	22																														
970	6293		6091		5940		5717		5480		5278		5023		4766		4496		4190		3863		3505		3208		2513																							
	1.92	30	2.13	93	2.28	61	2.44	35	2.59	28	2.73	28	2.87	28	3.00	27	3.10	27	3.17	27	3.22	26	3.25	27	3.30	27	3.10	27																								
1150	7461		7286		7146		7019		6821		6621		6433		6262		6049		5832		5613		5386		5147		4871		4596		4300		4012		3758		3175		2456											
	3.20	38	3.46	131	3.66	108	3.84	75	4.03	50	4.21	35	4.39	36	4.55	36	4.71	36	4.87	35	5.02	35	5.13	35	5.23	35	5.30	35	5.37	34	5.41	35	5.45	35	5.50	35	5.29	35	4.87	34										
1317	8545		8392		8252		8142		8030		7855		7680		7505		7347		7198		7021		6832		6642		6452		6253		6054		5831		5591		5350		5108		4835		4592		4392		4063	
	4.81	47	5.10	167	5.36	158	5.58	127	5.78	94	6.00	68	6.20	49	6.42	44	6.61	44	6.80	44	6.99	44	7.17	44	7.35	43	7.53	43	7.66	43	7.78	43	7.88	43	7.96	43	8.04	42	8.11	42	8.14	42	8.18	43	8.26	44	8.22	44

Performance certified is for installation type B: Free inlet, Ducted outlet. Power rating (BHP) does not include transmission losses. Performance ratings do not include the effects of appurtenances (accessories).

The sound ratings shown are loudness values in hemispherical sones at 1.5 m (5 ft) in a hemispherical free field calculated per AMCA Standard 301. Values are shown for: Installation Type B: free inlet hemispherical sone levels.

Performance Data

TIB360 PERFORMANCE DATA

CFM and Sones vs. Static Pressure

RPM	0.000"		0.250"		0.500"		0.750"		1.000"		1.250"		1.500"		1.750"		2.000"		2.250"		2.500"		2.750"		3.000"		3.250"		3.500"		3.750"		4.000"		4.250"		4.500"		4.750"		5.000"		5.250"		5.500"		5.750"	
	BHP	Sone	BHP	Sone	BHP	Sone	BHP	Sone	BHP	Sone	BHP	Sone	BHP	Sone	BHP	Sone	BHP	Sone	BHP	Sone	BHP	Sone	BHP	Sone	BHP	Sone	BHP	Sone	BHP	Sone	BHP	Sone	BHP	Sone	BHP	Sone	BHP	Sone	BHP	Sone	BHP	Sone	BHP	Sone	BHP	Sone	BHP	Sone	BHP	Sone
476	6885		6185		5349		3962																																											
	0.50	10.70	0.69	10.10	0.82	9.60	0.86	9.40																																										
516	7464		6827		6119		5090		2898																																										
	0.64	12.20	0.84	11.60	1.00	11.10	1.09	10.60	0.96	10.20																																								
590	8535		7993		7430		6698		5732		4124																																								
	0.96	15.50	1.19	17.30	1.39	14.60	1.54	13.90	1.64	13.40	1.56	13.30																																						
650	9403		8901		8383		7816		7076		6168		4682																																						
	1.28	18.00	1.53	23	1.77	17.20	1.96	16.30	2.11	16.00	2.19	15.70	2.11	15.60																																				
744	10764		10309		9884		9442		8909		8277		7538		6580		5114																																	
	1.92	22	2.21	32	2.50	21	2.74	21	2.96	19.90	3.13	19.80	3.26	19.10	3.29	19.50	3.12	19.20																																
882	12761		12364		12026		11635		11267		10852		10388		9829		9206		8524		7639		6423		1997																									
	3.20	30	3.55	48	3.89	36	4.23	28	4.51	28	4.78	27	5.01	26	5.21	26	5.37	25	5.47	25	5.47	26	5.28	25	3.00	19.70																										
1010	14613		14266		13950		13663		13299		12975		12661		12242		11843		11352		10809		10265		9631		8846		7905		6609																			
	4.80	38	5.20	64	5.60	54	5.98	41	6.37	35	6.70	35	7.01	34	7.31	33	7.56	33	7.78	32	7.99	32	8.13	31	8.23	31	8.22	32	8.10	32	7.70	31																		

TIB365 PERFORMANCE DATA

CFM and Sones vs. Static Pressure

RPM	0.000"		0.250"		0.500"		0.750"		1.000"		1.250"		1.500"		1.750"		2.000"		2.250"		2.500"		2.750"		3.000"		3.250"		3.500"		3.750"		4.000"	
	BHP	Sone	BHP	Sone	BHP	Sone	BHP	Sone	BHP	Sone	BHP	Sone	BHP	Sone	BHP	Sone	BHP	Sone	BHP	Sone	BHP	Sone	BHP	Sone	BHP	Sone	BHP	Sone	BHP	Sone	BHP	Sone	BHP	Sone
390	8929		7552		5251																													
	0.61	9.60	0.77	8.80	0.83	8.30																												
423	9685		8414		6780																													
	0.78	11.40	0.96	10.50	1.08	9.30																												
484	11083		10015		8764		6758																											
	1.16	15.30	1.37	14.20	1.56	12.70	1.59	12.10																										
533	12206		11245		10184		8851		5883																									
	1.55	18.40	1.78	18.60	2.00	16.70	2.16	15.30	1.94	15.20																								
610	13970		13130		12211		11249		10041		7826																							
	2.33	23	2.59	27	2.84	22	3.08	20	3.24	19.10	3.10	19.30																						
724	16582		15899		15165		14350		13556		12587		11395		9456		3917																	
	3.89	31	4.21	39	4.52	29	4.81	28	5.09	26	5.32	25	5.43	24	5.23	25	3.05	23																
828	18964		18408		17725		17079		16362		15685		14869		13971		12834		11174		7234													
	5.82	39	6.21	51	6.54	42	6.89	36	7.22	35	7.55	33	7.83	32	8.04	31	8.13	30	7.92	31	6.19	30												

Performance certified is for installation type B: Free inlet, Ducted outlet. Power rating (BHP) does not include transmission losses. Performance ratings do not include the effects of appurtenances (accessories).

The sound ratings shown are loudness values in hemispherical sones at 1.5 m (5 ft) in a hemispherical free field calculated per AMCA Standard 301. Values are shown for: Installation Type B: free inlet hemispherical sone levels.

TERMS AND CONDITIONS OF SALE

ACCEPTANCE All orders and sales are subject to written approval and acceptance by an executive officer of Acme Engineering & Manufacturing Corporation at Muskogee, Oklahoma, (the "Company") and are not binding on the Company until so approved.

DELIVERY All shipping and delivery dates are estimated only. No delays in delivery will subject the Company to any costs, damages or fees for late delivery. Delivery of the products herein specified shall be made F.O.B. point of shipment, unless otherwise stated. The Company shall not be liable for delay due to causes beyond its reasonable control, such as Acts of God, acts of the purchaser, acts of civil or military authorities, priorities, fires, strikes, floods, epidemics, war, riots, delays in transportation, car shortages, and inability, due to reasons beyond its reasonable control, to obtain necessary labor, material, or manufacturing facilities. In the event of such a delay, the date of delivery shall be extended for a period equal to the time lost by reason of the delay.

TERMS OF PAYMENT If, in the judgment of the Company, the financial condition of the purchaser at any time does not justify continuation of manufacture or shipment on the terms of payment specified, the Company may require full or partial payment in advance.

Pro rata payments shall become due as shipments are made. Each shipment or delivery shall constitute a separate sale, and the default of any shipment or delivery shall constitute a separate sale, and the default of any shipment or delivery shall not vitiate the contract as to other shipments or deliveries.

SALES AND SIMILAR TAXES The Company's prices do not include sales, use, excise, or similar taxes. Consequently, in addition to the price specified herein, the amount of any present or future sales, use, excise, or other similar tax applicable to the sale of the product herein shall be paid by the Purchaser, or in lieu thereof the Purchaser shall provide the Company with a tax exemption certificate acceptable to the taxing authorities.

CANCELLATION Any contract resulting from the Purchaser's order may be canceled by the Purchaser only by negotiations and upon payments of reasonable cancellation charges which will take into account expenses already incurred and commitments made by the Company.

DESIGN CHANGES The Company reserves the right to make changes in design, improvements and additions in and to its products any time without imposing any liability or obligations to itself to apply or install the same in any product manufactured by it.

TITLE The title and right of possession of the products sold herein shall remain with the Company and such products shall remain personal property until all payments herein (including deferred payments whether evidenced by notes or otherwise) shall have been made in full in cash and the Purchaser agrees to do all acts necessary to perfect and maintain such right and title in the Company.

PRICE ADJUSTMENTS Prices are subject to change upon notice by the Company. Prices on existing orders are subject to surcharges in the event of cost increases of metals and transportation. All complete component accessory material manufactured by others and furnished with the Company's products such as motors, drives, vibration equipment, controls or other completely assembled component structures, are subject to adjustment to the price at time of shipment regardless of the date of original order entry.

SAFETY ACCESSORIES The Company manufactures products designed to serve multiple applications and offers a wide range of safety equipment, including guards and other devices, as may be required to meet customer specifications. Without exception, the Company recommends that all orders include applicable safety devices. Products ordered without applicable safety devices is clearly the responsibility of the Purchaser. Further, the Purchaser warrants that it has determined and acquired any and all safety devices required for products sold by the Company. Weather covers and guards for motor and V-belt drives, couplings, shafts and bearings, along with inlet and outlet screens, are optional accessories noted in the price list.

GOVERNING LAW The rights, obligations and remedies of Purchaser and the Company, the interpretation of these terms and conditions and the sale of products by the Company shall be governed by Oklahoma law, without regard to any principles of conflict of laws.

ARBITRATION Any dispute arising under or in connection with these terms and conditions or the sale of products shall be settled by binding arbitration administered by the American Arbitration Association under its Commercial Arbitration Rules, and judgment on the award rendered by the arbitrator may be entered in any court having jurisdiction thereof. The dispute shall be resolved by one neutral arbitrator who shall have no affiliation with either Purchaser or the Company and shall be selected by the American Arbitration Association office in Dallas, Texas. The arbitration proceedings shall be held in Muskogee, Oklahoma.

APPLICABLE DOCUMENTS The agreement between the Company and the Purchaser relating to the products includes these terms and conditions of sale, any applicable installation and maintenance instructions provided by the Company and any terms appearing on the Company's quotation, sales order acknowledgment and invoice.

WARNING Acme products are designed and manufactured to provide reliable performance but they are not guaranteed to be 100% free of defects. Even reliable products will experience occasional failures and this possibility should be recognized by the Purchaser and all End Users. If these products are used in a life support ventilation system where failure could result in loss or injury, the Purchaser and all End Users should provide adequate back-up ventilation, supplementary natural ventilation or failure alarm system, or acknowledge willingness to accept the risk of such loss or injury.

WARNING DO NOT use in HAZARDOUS ENVIRONMENTS where fan's electrical system could provide ignition to combustible or flammable materials unless unit is specifically built for hazardous environments. Comply with all local and national safety codes including the National Electrical Code (NEC) and National Fire Protection Act (NFPA).

CAUTION Guards must be installed when fan is within reach of personnel or within eight (8) feet (2.5 m) of working level or when deemed advisable for safety.

DISCLAIMER The Company has made a diligent effort to illustrate and describe the products accurately in all Company literature; however such illustrations and descriptions are for the sole purpose of identification and do not express or imply any warranty.

LIMITED WARRANTY

WARRANTY AND DISCLAIMER: the Company extends this limited warranty to the original purchaser and warrants that products supplied by the Company, shall be free from original defects in workmanship and materials for two years from date of shipment (except for the warranty periods noted for products listed below), provided same have been properly handled, stored, installed, serviced, maintained and operated. This warranty shall not apply to products which have been altered or repaired without the Company's express authorization, or altered or repaired in any way so as, in the Company's judgment, to affect its performance or reliability, nor which have been improperly installed or subjected to misuse, negligence, or accident, or incorrectly used in combination with other substances. The Purchaser assumes all risks and liability for results of use of all products.

Evaporative cooling pads are warranted to be free of defects in materials and workmanship for a period of two years from date of shipment provided same have been properly handled, stored, installed, serviced, maintained and operated; and further, not subjected to excessive heat, corrosive agents or chemicals, or mechanical abuse that may cause tearing, crushing or undue deterioration, nor used on a system or in a manner other than that for which it was designed as explained in the product literature.

The following products are warranted to be free of defects in materials and workmanship for the periods shown from date of shipment: Acme's exclusive duplex split pillow block bearings and shaft five years, belts one year, Polyethylene tubing 90 days, AIR40 Heater warranty one year, AIR40 Emitter warranty three years and DDP fan lifetime warranty on its propeller, cone, and housing.

LIMITATION OF REMEDY AND DAMAGES: All claims under this warranty must be made in writing and delivered to P. O. Box 978, Muskogee, Oklahoma, 74402, within 15 days after discovery of the defect and prior to the expiration of two years from the date of shipment by the Company of the product claimed defective, and Purchaser shall be barred from any remedy if Purchaser fails to make such claim within such period.

Within 30 days after receipt of a timely claim, the Company shall have the option either to inspect the product while in Purchaser's possession or to request Purchaser to return the product to the Company at Purchaser's expense for inspection by the Company. The Company shall replace, or at its option repair, free of charge, any product it determines to be defective, and it shall ship the repaired or replacement product to Purchaser F.O.B. point of shipment; provided, however, if circumstances are such as in the Company's judgment to prohibit repair or replacement to remedy the warranted defects, the Purchaser's sole and exclusive remedy shall be a refund to the Purchaser of any part of the invoice price, paid to the Company, for the defective product or part.

The Company is not responsible for the cost of removal of the defective product or part, damages due to removal, or any expenses incurred in shipping the product or part to or from the Company's plant, or the installation of the repaired or replaced product or part.

The warranties set forth above do not apply to any components, accessories, parts or attachments manufactured by other manufacturers; such being subject to the manufacturer's warranty, if any. To the extent not prohibited by the manufacturer's warranty, the Company shall pass through to Purchaser such manufacturer's warranty.

THE COMPANY'S WARRANTY IS IN LIEU OF ALL OTHER WARRANTIES, EXPRESS OR IMPLIED, ARISING BY LAW OR OTHERWISE, INCLUDING WITHOUT LIMITATION THE IMPLIED WARRANTIES OF MERCHANTABILITY AND FITNESS FOR A PARTICULAR PURPOSE, WHICH ARE HEREBY EXPRESSLY DISCLAIMED AND WAIVED. THIS WARRANTY CONSTITUTES THE COMPANY'S SOLE AND EXCLUSIVE WARRANTY FOR DEFECTIVE GOODS AND PURCHASER'S SOLE AND EXCLUSIVE REMEDY FOR DEFECTIVE PRODUCTS.

No employee, agent, dealer, or other person is authorized to give any warranties on behalf of the Company or to assume for the Company any other liability in connection with any of its products except in writing and signed by an officer of the Company.

REPLACEMENT PARTS If replacement parts are ordered, purchaser warrants that the original components in which these replacement parts will be placed are in satisfactory working condition, and when said replacement parts are installed, the resultant installation will operate in a safe manner, at speeds and temperatures for which the original product was purchased.

TECHNICAL ADVICE AND RECOMMENDATIONS, DISCLAIMER: Notwithstanding any past practice or dealings or any custom of the trade, sales shall not include the furnishing of technical advice or assistance or system design. Any such assistance shall be at the Company's sole option and may be subject to additional charge.

The Company assumes no obligation or liability on account of any recommendations, opinions or advice as to the choice, installation or use of products. Any such recommendations, opinions or advice are given and shall be accepted at Purchaser's and End User's risk and shall not constitute any warranty or guarantee of such products or their performance.

LIMITATION OF LIABILITY The cumulative liability of the Company to the Purchaser and any other persons for all claims in any way relating to or arising out of the products, including, but not limited to, any cause of action sounding in contract, tort, or strict liability, shall not exceed the total amount of the purchase price paid for those products which are the subject of any such claim. This limitation of liability is intended to apply without regard to whether other provisions of this agreement have been breached or have proven ineffective even if the Company has been advised of the possibility of such claims or demands. In no event shall the Company be liable to the Purchaser or any other person for any loss of profits or any incidental, special, exemplary, or consequential damages for any claims or demands brought by the Purchaser or such other persons.

INDEMNITY The Company's maximum liability to Purchaser and to any end user is as set forth above. The Company makes no warranty to anyone for any products not manufactured by the Company and shall have no liability for any use or installation of any products (whether manufactured by the Company or other manufacturers) not specifically authorized by this sale. Purchaser acknowledges various warnings by the Company regarding the products and its installation and use. If the Company incurs any claims, lawsuits, settlements, or expenses (including attorney fees) for any loss, injury, death or property damage including, but not limited to, claims arising out of the Purchaser's or any end user's installation or use of the products, the Purchaser shall indemnify and hold the Company harmless.

ACME ENGINEERING AND MANUFACTURING CORPORATION
P.O. Box 978
Muskogee, Oklahoma 74402
Telephone 918/682-7791
Fax 918/682-0134
www.acmefan.com