Catalog

Performance Climate Changer™ Air Handler

Unit Sizes 3-30

May 2009

CLCH-PRC015-EN

Introduction

Trane introduces the next generation of air handlers

Performance Climate Changer air handlers combine the Trane tradition of engineering excellence with the latest in manufacturing technology to give you an energy efficient air handler with superior performance, the highest quality and reliability, and the lowest installed cost in the industry. This air handler was designed to incorporate such features as component flexibility, integrated control options, and proven performance to give you the optimal system to clean, filter, dehumidify, heat, and cool your building.

Superior Performance

- ASHRAE 111 Class 6 low-leak casing design achieving less than 1.0 percent leakage rate at +/- 8 inches w.g.
- Less than L/240 @ +/- 8 inches w.g. panel and door deflection
- 2-inch R13 foam-insulated, mid-span thermal break panels and thermal break doors
- Casing thermal resistance ratio TR-value of 0.6
- New filter technology that exceeds LEED requirements and reduces filter pressure drops up to 50 percent versus previous designs

Industry-Leading Energy Efficiency

- AMCA 611-certified Traq airflow monitoring station
- Discharge plenums and plenum fan sections available with variable size, type, and location of openings to reduce static pressure loss and lower energy consumption
- 50,000 hour LED service lights
- Low-leak, high thermal performance casing design
- All dampers meet ASHRAE 90.1 lowest specified leakage requirements
- High-efficiency coil fins deliver superior heat transfer while allowing face velocities in excess of 625 fpm without moisture carryover

System Optimization

- Optimal design to meet the Trane EarthWise™ design philosophy incorporating high-efficiency air handlers and water chillers with low flow rates and low temperatures.
- Factory-engineered, -mounted, and -tested control packages with properly sealed casing openings.
- Variety of coil types with high-efficiency coil fins allow lower coil approach temperature and reduce chance of moisture carryover
- Ability to choose the exact number of fins per foot of coil surface to enhance heat transfer and air pressure performance
- Wide array of fan options
- Control options to easily incorporate fan pressurization and demand control ventilation strategies.
- Design and analysis tools provide whole building analysis, acoustical design guidance, equipment performance data, and suggested control strategies to help achieve optimum system design with tailored energy, IAQ, and project budget solutions.

Highest Quality

- UL/CUL listed
- AHRI Standard 430-certified air-handling unit
- AHRI Standard 410-certified coils are all factory tested
- All fans are dynamically balanced in the horizontal and vertical planes.
- All fans with VFDs undergo inverter balancing.
- Formulated panels and integral base frame minimize seams that could introduce air leak paths
- Integrated raceway for wiring protection.
- Integrated, fully-enclosed control panel for starters, VFDs, and unit-mounted controllers.
- Pre-engineered, factory-mounted controls, including end devices, motor controllers, VFDs, unit-mounted DDC controllers, Traq™ damper ventilation control section, UL-listed turnkey control packages.

Lowest Installed Cost

- Lifting lugs included on the integral base frame.
- Units ship with skid designed for forklift transport.
- Variable height, size, type, and location of openings on discharge plenums minimize duct transitions.
- Factory-installed interoperable controls shorten construction cycles, simplify job-site coordination, reduce installation time and expense, and provide single-source responsibility for warranty and service issues.
- Single-point power is available with high-voltage distribution block and external main unit disconnect with lockout/tagout capabilities.
- External service module with 15 amp GFCI receptacle, light switch, and controller display and communications port
- Quick-connect wiring minimizes installation costs and provides wiring integrity between sections
- Factory-installed conduit connectors eliminate penetrations in the wrong location.
- Motor leads can be run through flexible metal conduits to NEMA 4 external motor junction box.

Table of Contents

Introduction 2
- Trane introduces the next generation of air handlers 2
  - Superior Performance 2
  - Industry-Leading Energy Efficiency 2
  - System Optimization 2
  - Highest Quality 3
  - Lowest Installed Cost 3

Features and Benefits 9
- Form and Function 9
- Flexibility 9
  - Reduces Footprint when Stacked 9
  - Eases Retrofit, Renovation, and Replacement 10
  - Fan Choices 10
  - Coil Optimization 10
  - Filtration Options 11
  - Airside Options 12
- Construction and Integrity 12
  - Tight, Robust Construction 12
- Turnkey Control Solutions 13
  - Single-Point Power 15
  - Single-Source Responsibility 15
  - Reduced Installation Costs 15
  - Reliable Operation 16
  - Open Protocol 16
  - Service Module 16
- Engineered for Good IAQ 17
  - Measure and Control Ventilation Airflow 17
  - Remove Airborne Contaminants 18
  - Inhibit Microbial Growth 20
- Sound-Sensitive Solutions 21
  - Provide Accurate, Tested Sound Data 21
  - Minimize Sound Source 21
- Energy-Efficient Performance 22
  - Recover Energy 22
  - Reduce Energy Consumption 23
  - Increase Operating Efficiency 24
- Proven Performance 25
  - AHRI Standards 25
  - UL Listing 25
  - AMCA Certification 26
  - Canadian Registration Number (CRN) 26
  - Demand Flow Technology 26
  - ISO Certification 26

HVAC Design Fundamentals 27
Provide Proper Ventilation 27
Maintain Building Pressure 27
Protect Coils from Freezing 28
Filter Contaminants 29
Particulates 29
Gases and Vapors 30
Minimize Microbial Growth 30
Water Management 30
Dehumidification 32
Humidification 32
Provide Quiet Comfort 33
Application Considerations 35
Air Handler Design 35
Single-Path Design 35
Dual-Path Design 36
Standard AHU Arrangements 37
Draw-Thru Arrangements 37
Blow-Thru Arrangements 38
Stacked Units 38
Arrangements for Specific Applications 38
Building Pressurization 38
Acoustics 45
Components and Options 47
Access/Blank and Turning Section 47
Coils 47
1/2-Inch Coils 48
5/8-Inch Coils 49
One-Inch Steam Coils 50
Modified Coils 50
Coil Runaround Loop 50
Dampers 51
Traq™ Dampers 51
Diffuser 51
Discharge Plenum 52
Fans 52
Filters 54
Mixing Box and Economizer 55
Selection Procedure 56
General Data 62

Unit Size 3 63
Unit Size 4 65
Unit Size 6 67
Unit Size 8 69
Unit Size 10 71
Unit Size 12 73
Unit Size 14 75
Unit Size 17 77
Unit Size 21 79
Unit Size 25 81
Unit Size 30 83

Coil Data 85
Drain Pans 85
Connection Diameters for Hydronic and Steam Coils 85
Refrigerant Coil Connections 87
Coil Circuiting 88
Distributor Arrangement 88
Distributor Circuiting 88
Face-Velocity Limits for Moisture Carryover 91

Performance Data 94
Diffuser 94
Discharge Plenums 95
Horizontal or Vertical Discharge Plenum with Factory Openings 95
Filters 97
Damper Torque Requirements 98
Mixing Box with Dampers 99
AMCA 610 Test Performance for Traq Damper 101

Dimensions and Weights 102
Service Clearances 102
Access/Turning Section 103
Coils 105
Coil Section 105
Coil Locations 108
Diffuser 111
Discharge Plenum 112
Fans/Motors 124
Starter/VFD Weights 124
Motor Weights 124

Control Section 124
Housed Fans 126
Filters 137
Filter Sizes 137
Mixing Box 150
Mechanical Specifications 155
Unit Construction 155
Casing Construction 155
Unit Flooring 155
Casing Leakage 155
Insulation 156
Drain Pans 156
Access Doors 156
View Windows 156
Marine Lights 156
Fans 157
FC Fan 157
BC Fan 157
AF Fan 157
Plenum (Belt-drive) Fan 157
Fan Isolation 157
1-Inch, Seismic Spring Isolators 157
2-Inch, Seismic Spring Isolators 157
Fan Drives 158
Fan Motors 158
Motor Options 158
Grease Lines 158
Fan Section Options 158
Multiple Belt Drive 158
External Motor Junction Box 158
Motor wiring conduit 159
Flow Meter 159
Belt Guard 159
Door Guard 159
Fan Modulation 159
Variable-Frequency Drives (VFDs) 159
Inverter Test 159
Coils 159
Horizontal and Vertical Coil Sections 159
Inspection Section 160
Water Coils (UW, UU, W, 5W, 5A, WD, 5D, D1, D2, P, or TT) 160
Refrigerant Cooling Coils (UF) 160
Steam Heating Coil (NS) 160

Coil Coating 161
Filters 161
Permanent Filters 161
Throwaway Filters 161
Pleated Media Filters 161
Bag Filters 161
Cartridge Filters 162
4-Inch High-Efficiency Filters 162
Filter Section Option 162
Differential Pressure Gage 162
Mixing Section 162
Mixing Section, Filter Mixing Section, Airflow Measurement Station (Traq™ Dampers), and Economizer Sections 162
Dampers 162
Airflow Measurement Station (Traq Dampers) 162
Other Sections and Options 163
Access/Inspection Sections 163
Diffuser Section 163
Turning and Discharge Plenum Sections 163
Plenum Attenuation Panels 163
Single-Point Power Wiring 163
Controls 163
Combination Starter–Disconnects 163
Combination VFD and Disconnects 164
Starter/Disconnect or VFD Enclosure Options 164
Factory-Mounted DDC System 165
Direct Digital Controller 165
Factory-Mounted Control Options—Electronic End Devices 165
Field-Mounted Control Options 166

Features and Benefits

Figure 1. Trane Performance Climate Changer™ air handler

Form and Function

Flexibility and versatility are standard in the Performance air handler. As a customizable cataloged air handler, standard components can be arranged to meet most commercial, institutional and industrial applications for the indoor air handler market. Pre-engineered custom options expand that flexibility while ensuring proven, tested performance and dependability, and reducing the costs and long lead times associated with most custom units. Some projects call for an air handler that incorporates new, emerging technologies or a job-specific requirement. Trane's experienced team of professionals can tailor the Performance air handler to meet these requirements.

Flexibility

The Performance air handler design adopts a "building-block" approach that allows you to design a unit specifically for your project. Choose the "blocks" you need from the wide range of standard and custom-engineered sections, and arrange them to satisfy the air-handling requirements of the application.

Reduces Footprint when Stacked

The Performance unit's design makes it easy to stack sections - even coil sections. Reducing the unit footprint is very advantageous, especially in tight mechanical rooms. The structural integrity remains intact, even when panels are removed for service or maintenance activities.

Eases Retrofit, Renovation, and Replacement

Buildings age, usage changes, loads change, new technology emerges, codes and standards are revised. Change is inevitable.

The Performance air handler readily lends itself to the special needs of the renovation, retrofit, and replacement markets. The Performance air handler can be shipped in small segments that can easily be moved into tight spaces of existing buildings.

Fan Choices

An extensive array of fan types and options, including variable-frequency drives (VFDs) for modulation in variable-air-volume systems, lets you optimize the fan to best fit not only the airflow and static pressure requirements, but also the acoustical, efficiency, and discharge requirements.

Figure 2. Trane offers a wide variety of fan choices

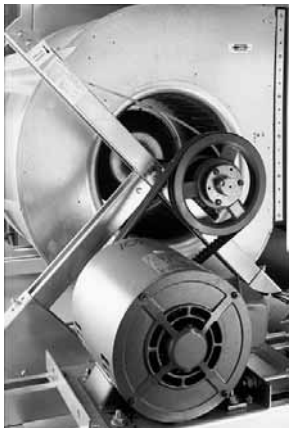

Fan types include:

- Belt-drive plenum fans
- Double-width/double-inlet (DWDI) centrifugal fans with front, top, or bottom discharges in the following available types:
  - Forward-curved (FC)
  - Backward-curved (BC)
  - Airfoil (AF)
- Single-width/single-inlet (SWSI) plenum fans with multiple or single discharges on the front, top, bottom, or sides of the section

Plenum fan openings can be tailored to the size, type and location to best fit your velocity and static pressure requirements improving energy and sound. Round, rectangular, and bellmouth openings are all available.

Each fan is rated in accordance with Standard 430 of the Air Conditioning Heating and Refrigeration Institute (AHRI) and all DWDI fans are AHRI Standard 430-certified to assure published performance.

Coil Optimization

The variety of Trane coil types, sizes, arrangements, and materials allows you to select a coil that is optimized for pressure drop and capacity requirements. Published coil performance is certified in accordance with AHRI Standard 410 and meets CRN (Canadian Registration Number) standards.

Trane is at the leading edge of coil technology. Through extensive laboratory testing and numerous job-site installations, Trane has developed unique fin surfaces for its coil offerings. These enhanced fin surfaces have superior heat transfer characteristics and allow greater velocities of air to move through the cooling coil without causing moisture carryover.

The industry is familiar with the 500-fpm limit through a cooling coil as a “rule of thumb” to safeguard against moisture carryover. However, some applications have tight dimensional constraints that require high coil face velocities. Trane fin designs extend this limit in excess of 625 fpm, depending upon air conditions, coil size, and coil-fin type, and spacing. Tested data for moisture carryover is incorporated in the Trane Official Product Selection System (TOPSS™). In cases where moisture carryover is possible, the TOPSS program alerts you to this fact with a moisture carryover warning. See “Face-Velocity Limits for Moisture Carryover,” on page 91 for moisture carryover curves.

Figure 3. Coil with copper header

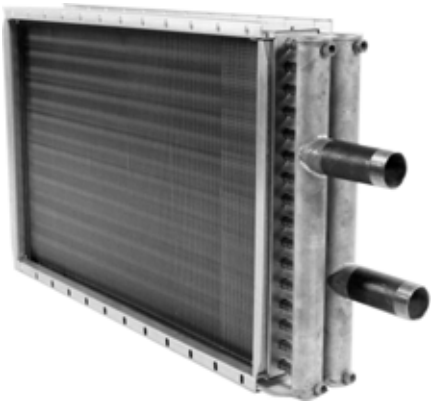

Figure 4. Coil with cast iron header

Coil options include:

- Two- to eight-row, 1/2-inch OD (outside diameter) chilled water or refrigerant coils
- Two- to 10-row, 5/8-inch OD chilled water or refrigerant coils
- One- or two-row 5/8-inch OD hot water coils
- One- or two-row, 1/2-inch OD hot water coils
- One-row, 1-inch OD distributing-type steam coils
- Half, full, and dual-serpentine, circuited water coils
- Full face, split face, and intertwined circuited refrigerant coils

A variety of fin surfaces are also available, with the following options:

- Variable fin spacing on all fin types to fine-tune coil capacity and air-pressure drop
- Aluminum Delta-Flo™ H and Prima-Flo™ H fins that maximize the heat transfer and moisture carryover limits of the coils
- Aluminum Delta-Flo E and Prima-Flo E fins that minimize the coil air-pressure drop
- Copper Prima-Flo™ fins for corrosion protection

Filtration Options

The Performance air handler can be equipped with a variety of filtration options, all tested in accordance with ASHRAE Standard 52.2. Available filters and minimum efficiency reporting values (MERV) are:

- Two-inch permanent-MERV 2
- Two-inch disposable-MERV 5
- Two-inch and four-inch pleated media-MERV 8-14
- Eighteen-inch and 30-inch bag or 12-inch cartridge filters-MERV 11-15
- Two-inch and four-inch antimicrobial-treated filters-MERV 7

Airside Options

Many standard options are available for specific applications, including:

- Exhaust or return fan economizers
- Direct space pressurization control
- Thermal break double-wall access doors
- Thermal break casing
- Factory-mounted and run-tested controls
- Versatile access section lengths to meet specific needs
- Multiple belt drives
- Full array of pre- and final filter sections
- Extended grease lines
- Single-point power
- LED service lights
- Variable sizes, types and locations for discharge plenums, plenum fans, and mixing box openings
- Variable height vertical discharge plenums
- Positional controls section
- Multiple base frame heights
- Single-handle, multiple latch doors
- External motor junction box
- Low-flow Traq dampers
- Flush-mounted dial-type filter gauge
- Stainless steel inner liners

Construction and Integrity

The Performance air handler provides a unique hybrid design of modular and unitized features delivering configuration flexibility, robust structural integrity, and superior casing performance. All sections – even coil sections – can be stacked in a variety of space-saving configurations.

Tight, Robust Construction

Engineered panels and doors

Trane engineered panels and doors incorporate mid-span, internal thermal breaks to eliminate thermal conduction paths from the interior of the air handler to the exterior. Likewise, door frames also feature thermal breaks to minimizing heat transfer.

The panels and doors are designed to provide extraordinary insulating capabilities for efficient and cost effective performance. Panels are formulated with interlocking seam features and integral gasket seals optimized to drive down casing air leakage. The Performance air handler design is capable of meeting an ASHARE 111 Class 6 leakage level, better than most custom designs, up to +/-8 inches w.g. Standard double-wall panels and doors include two-inch closed cell foam insulation providing a minimum R-value of 13, in addition to unsurpassed panel strength and L/240 deflection at +/- 8 inches w.g.

The no-through-metal design and low casing air leakage delivers thermal performance that assures condensation will not form on the casing exterior even under 55°F supply air temperature and design conditions on the unit exterior of 81°F dry bulb and 73°F wet bulb. In addition to the low air leakage, these standard features prevent equipment from unnecessarily creating slip hazards in the mechanical equipment room or premature corrosion of the casing. With this level of casing performance and thorough testing of Trane engineers, Trane is able to deliver predictable thermal performance and key guidance to consulting engineers.

Figure 5. Inward-opening doors

Inward-opening doors with heavy-duty door handles

Inward-opening doors (see Figure 5) are available for positive-pressure access and discharge plenum sections. Positive pressure inside the sections helps seal the door against the door frame. Also, the door opens against unit pressure to prevent it from blowing open, promoting safety.

Heavy-duty door handles and hinges are surface-mounted, eliminating a potential leakage path since they do not pierce the casing. A removable hinge pin allows for easy door removal; the symmetrical handle and hinge mounting allows for easy field modification if it becomes necessary to change from a left-hand to a right-hand door.

Turnkey Control Solutions

Trane air handlers offer one of the most comprehensive factory-packaged controls systems available, from end devices to total system integration, with industry-standard open protocols. An air handler turnkey control package can be used in a stand-alone operation, or it can be fully integrated into a comprehensive control system. Trane's Integrated Comfort™ system (ICS) incorporates the benefits of factory-installed controls and links the air handler to the Tracer Summit™ building management system.

These options are designed to lower installation costs and risk while dramatically improving the quality of the application and the performance of the air handler. The entire air handler control system is engineered, mounted, wired, and tested before leaving the factory. As a result of strict quality manufacturing methods, Tracer control options bring consistency and reliability to the control-system package and provide single-source responsibility.

The following control devices are available as standard mounted on fan sections or within the positional controls section:

- Combination starters and disconnects
  - International Electrotechnical Commission (IEC) standards
- Variable-frequency drives (VFDs)
  - Drive/OFF/Bypass selector switch
  - Digital manual speed control
  - Three-year parts and labor warranty
  - Open drive to provide easy serviceability
- Unit-mounted direct digital controllers (DDCs).
  - A factory-wired and mounted Tracer MP580 programmable controller is available. A combination of up to 81 inputs and outputs are available to meet job requirements. A user display and time clock are available for stand-alone applications.

The following end devices are also available:

- Valves
- Electronic damper actuators
- Temperature and pressure sensors
  - Available in multiple temperature sensor materials
- Averaging temperature sensors
  - Available in multiple temperature sensor materials
- Fan and filter status switches
- Low-limit switches (see Figure 7)
  - Double pole, single throw, manual reset
  - Available wired to low voltage and high voltage
- Condensate overflow switches

Figure 6. Integral controls cabinet for starters, variable frequency drives, and unit controllers.

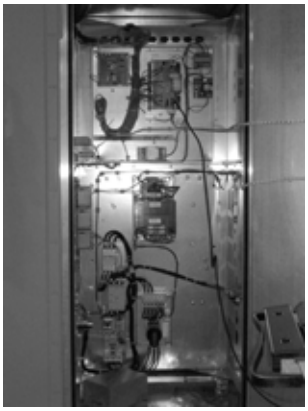

Figure 7. Factory-mounting ensures quality installation, as shown with the low-limit radius bend.

Single-Point Power

For air-handling units requiring both a supply and return/exhaust fan, we can supply single-point power to both factory-installed and tested fan motor starters or variable frequency drives. Single-point power wiring includes a high voltage distribution block and main unit disconnect with lockout/tagout capabilities. From a single line voltage connection, power is provided to all components including controls and service lights. Single-point power wiring does not compromise the UL or ETL certification of the unit.

Single-Source Responsibility

Equipment and interoperable controls, engineered and provided by a single manufacturer, provide faster construction cycles and simplify job-site coordination efforts. This simplification reduces installation time, expense, and risk.Trane equipment and controls package provides the optimal performance when integrated with a Tracer building management system, forming a Trane Integrated Comfort™ system (ICS). ICS is a powerful system architecture that unifies Trane HVAC equipment, direct digital control, and building management into a cohesive whole with an assured source of support. This system is managed with the Tracer Summit building management system.

The Tracer Summit building management system is based on ASHRAE and American National Standards Institute (ANSI) BACnet Standard 135.

Reduced Installation Costs

Figure 8. Quick-connect wiring

While the air-handling system is in the factory, trained technicians install the control end devices and controllers using state-of-the-art equipment and agency-approved wiring practices. The system is pre-designed, pre-engineered, and checked out, making jobsite installation and commissioning fast and easy.

While many of these tasks and procedures could be done in the field, it is beneficial to do them in the factory due to time and accessibility constraints. As a result, field expenses for installation costs of conduit and wire are minimized, additional lead-time is alleviated, and jobsite coordination is simplified. Casing integrity is also maintained by minimized penetrations.

Factory wiring minimizes installation costs, too. Quick-connect wiring (see Figure 8) ensures integrity between sections without having to identify or check continuity.

In addition, job-site line-voltage wiring is reduced when controls are incorporated with either a combination starter and disconnect or a VFD. With a factory-mounted starter and disconnect or VFD, the air handler can be wired for single-point power requiring only one connection point to provide power to all motors, controls, and lights.

After installation, Tracer controllers enable information-sharing and complex control strategies, such as ventilation reset, throughout the HVAC system. They also ensure that each subsystem operates in the most efficient manner possible while continuing to satisfy current loads. The result is reduced building energy consumption through effective operation of the entire HVAC system at part-load conditions.

Trane ICS incorporates the latest energy-saving concepts to produce comfort at the lowest possible cost. In addition, it offers sophisticated building management features, such as after-hours billing, for commercial properties. This revenue opportunity enables developers and owners to accurately monitor and bill the cost incurred by a single tenant in after-hours usage of a facility. An optional DDC variable-air-volume (VAV) capability helps to accurately control each tenant space so that only an individual tenant's HVAC systems are activated. This helps minimize operating costs while providing flexible work hours.

Reliable Operation

Controller end devices, such as low-limit switches and averaging temperature sensors, are properly sized, selected, laboratory-tested, and mounted for optimal system performance. Trane engineers its unit-mounted controllers to provide the highest level of useful information possible. A computer-based test station tests low-voltage end-device functionality and surveys the input devices. This procedure ensures trouble-free installation and reliable operation when the Performance air handler reaches the job site. This feature can limit the number of call-backs and punch-list tasks.

Incorporating a Performance air handler with Trane ICS provides an engineered system of proven components and comfort concepts that is both state-of-the-art and reliable. Standard components are used to aid in serviceability and uniformity from building to building. These components, when tied to a Tracer Summit system, provide a powerful tool for scheduling preventive maintenance, reducing equipment downtime, and controlling service expense.

Open Protocol

Trane Tracer™ controllers also bring open communication protocols to the product offering. For building-level communications, Tracer controllers use BACnet®. BACnet is a standard, open communications protocol that allows integration and interoperability, enabling the controllers to not only tie into a Tracer Summit system, but also other building automation systems.

At the unit level, Trane uses LonTalk® for peer-to-peer communication between other Trane controllers and other approved LonTalk controllers. The programmable controller (MP580) follows the certified Space Comfort Controller (SCC) profile for constant-volume systems and the Discharge Air Controller (DAC) profile for constant-volume or VAV systems. Adherence of this controller to these standardized, certified profiles enables it to communicate with other controllers that use the same certified LonTalk profiles. Go to www.lonmark.org for more information.

Service Module

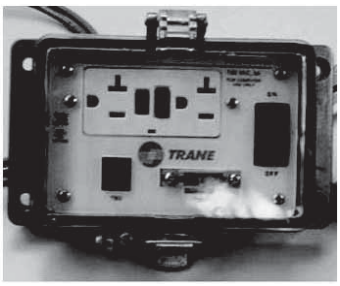

Performance air handlers can be equipped with an easy access Service Module when a Trane programmable controller and/or service lights are factory mounted. All service lights are wired to a common switch within the Service Module, located either on the fan section or the controller cabinet. The Service Module can also include a 15-amp ground-fault circuit interrupter (GFCI) receptacle separate from the load side of the equipment, a National Electrical Code (NEC) requirement. When an MP580 controller is factory mounted, the Service Module will have communications and portable display ports allowing service personnel to perform diagnostics without opening the unit or controller panel.

Engineered for Good IAQ

The building industry is continuously evolving and the rate of change is accelerating. Technological, environmental, economic, and regulatory factors are very different now than they were just a few years ago. The Performance air handler is engineered to address today's multifaceted design issues required to provide good indoor air quality (IAQ). Building owners must give particular attention to maintaining and documenting IAQ to ensure occupant comfort and to meet industry and government regulatory standards.

In Standard 62.1, the American Society of Heating, Refrigerating, and Air Conditioning Engineers (ASHRAE) provides guidance regarding suitable outside air volume to be brought into the building, recommended air filtration, and design recommendations and procedures to control microbial growth. However, applying these principles may lead to greater energy consumption, larger and noisier units, and increased risk of coil freeze-up. The flexibility of the Performance air handler enables you to configure a unique, IAQ-ready air-handling system that can address all of these concerns.

Measure and Control Ventilation Airflow

Figure 9. Traq dampers measure and control ventilation airflow.

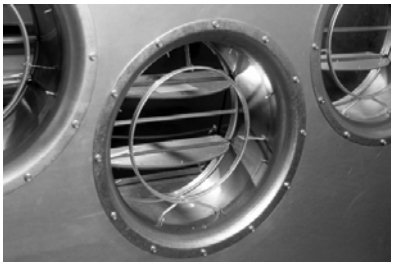

Figure 10. Piezometer ring measures inlet air flow.

The Trane AMCA 611-certified Traq™ airflow-monitoring solution (see Figure 9), allows direct measurement and control of outdoor and/or return airflow and is rated for a maximum leakage rate of 4 cfm/ft^2 at 1 inch w.g. complying with ASHRAE Standard 90.1 maximum damper leakage. The low-flow Traq option can be used as a key part of a demand control ventilation strategy to help drive down energy costs. When applied as part of an Integrated Comfort™ system (ICS) with the Tracer Summit™ building automation system, ventilation airflow can be controlled dynamically and documented to verify compliance with ASHRAE Standard 62.1. (See Trane product catalog BAS-PRC001-EN for more information on Tracer Summit systems.) Factory-mounted and tested to reduce installation and startup costs, the Traq damper also requires significantly less straight duct than traditional airflow-monitoring stations and does not require upstream straightening vanes for proper operation that could become clogged with debris.

A fan inlet airflow measuring system with a piezometer ring is also available on many centrifugal and plenum fans. Each system comes with a differential pressure transmitter (see Figure 10). The piezometer ring is connected to the LO port of the transmitter and the reference pressure point is connected to the HI port of the transmitter.

Remove Airborne Contaminants

Figure 11. Trane offers a variety of filter options.

Effectively controlling particulate and gaseous contaminants by reducing their concentrations or removing them from the air stream altogether is key to good IAQ. That necessitates proper filter selection (see Figure 11). The Performance air handler can be equipped with a variety of filtration options:

- Pleated media (MERV 8 to 14 based on ASHRAE Standard 52.2)
- Bag or cartridge filters (MERV 11 to 15 based on ASHRAE Standard 52.2)
- Antimicrobial treatments for filters inhibiting microbial growth (MERV 7 based on ASHRAE Standard 52.2)

Selecting the appropriate filter relies on understanding the particles that need to be filtered and their size. Trane offers a wide array of filtration options to adequately provide the indoor air quality needed for your application. The chart below provides design guidance for which filter option should be applied in your air handler

The Environmental Protection Agency (EPA) and ASHRAE recommend that the concentration of particulates in the air not exceed 0.05 mg/m^3 (measured as an annual mean). This guideline is established in an EPA PM-10 standard which focuses on smaller particulates (<10 microns) that are likely responsible for adverse health effects because of their ability to reach the lower regions of the respiratory tract.

ASHRAE Standard 62.1 and the U.S. Green Building Council LEED rating system emphasize the importance of including appropriate filters in the air handling system to effectively control particulate contaminants. Both establish minimum requirements for filter performance applied within a commercial building based on ASHRAE Standard 52.2, Method of Testing General Ventilation Air-Cleaning Devices for Removal Efficiency by Particle Size. This standard establishes a test procedure for evaluating the performance of air-cleaning devices as a function of particle size (0.3 to 10 microns). A minimum efficiency reporting value (MERV) is assigned to a filter based on its efficiency in three different particle-size ranges (0.3 to 1 microns, 1 to 3 microns, and 3 to 10 microns). A higher MERV rating indicates a greater ability to remove high quantities of small particles from air (see Table 1.

ASHRAE Standard 62.1 recommends a minimum MERV 6 filter, while the USGBC LEED rating system recommends a minimum MERV 8 during the construction cycle and MERV 13 during normal operation. National, state, or local codes established by government bodies or occupational groups may dictate more specific or stringent filtration requirements.

Table 1. MERV ratings versus particle size efficiencies

MERV Value	Group 1 Avg. Eff. % 0.3 to 1.0 microns	Group 2 Avg. Eff. % 1.0 to 3.0 microns	Group 3 Avg. Eff. % 3.0 to 10.0 microns	General Applications
1	n/a	n/a	E3<20	Residential Light Commercial
2	n/a	n/a	E3<20	
3	n/a	n/a	E3<20	
4	n/a	n/a	E3<20	
5	n/a	n/a	20<35	Commercial Industrial Better Residential
6	n/a	n/a	35<50	
7	n/a	n/a	50<70	
8	n/a	n/a	70	
9	n/a	E2<50	85	Commercial Telecommunications Industrial
10	n/a	50<65	85	
11	n/a	65<80	85	
12	n/a	80	90	
13	E1<75	90	90	Superior Commercial Health Care Hospitals General Surgery
14	75<85	90	90	
15	85<95	90	90	
16	95	95	95	

Inhibit Microbial Growth

Trane air handlers are designed with features that can inhibit microbial growth through proper condensate management, humidity control, and easy access for regular maintenance and cleaning.

Figure 12. Extended drain pans for easy cleaning are standard.

Proper Condensate Management

- Galvanized or stainless steel drain pans sloped in two directions to assure positive drainage helps prevent corrosion.
- Drain pans that can extend beyond the cooling coil (see Figure 12) for periodic cleaning are standard options.
- A variety of cooling coil fin options, including the high-efficiency H-fin design, are available. These fins allow for coil selections with face velocities in excess of 625 fpm without moisture carryover.

Figure 13. Trane offers numerous humidity control options

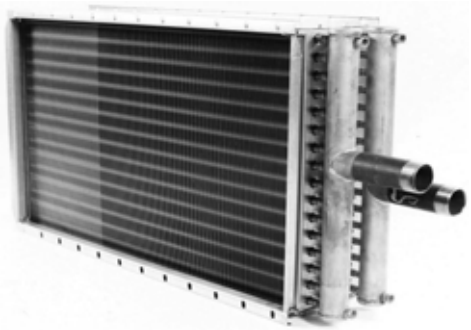

Humidity Control

Trane offers several solutions for addressing dehumidification:

- Low sensible-heat ratio coil selections
- Series recovery supply air tempering 100 percent outdoor air units in conjuction with other Trane airside products

Figure 14. Smooth, interior surface and removable coils make cleaning easy

Serviceability/Cleanability

- Full-size access doors and access sections are available for easy cleaning of internal components
- Fully removable coil and access panels
- Smooth, cleanable interior double-wall surfaces help improve indoor air quality.
- Coils are raised up out of the drain pan to make all coils removable from the side and provide easier access to the drain pan for cleaning.
- Antimicrobial treatments for drain pans and filters.

Sound-Sensitive Solutions

Figure 15. Schools and auditoriums are low NC applications

Acceptable space sound levels enhance occupant comfort and productivity. However, system designs that promote good IAQ can adversely affect acoustics: unlined ductwork, air handlers with solid double-wall construction, and increased fan static pressures (resulting from the addition of energy recovery and increased filtration) can magnify the building's background noise.

Trane air handlers have unique product flexibility that allow designers to use them in many low-NC (noise criteria) applications.

NC curves define not-to-exceed limits for a noise source to achieve a level of occupant acceptance. (See applications engineering manual FND-AM-5, "Acoustics in Air Conditioning," for more information about NC levels.) Performance air handlers can be used successfully in NC 35 offices and schools.

Provide Accurate, Tested Sound Data

Traditionally, ASHRAE algorithms have been used to predict the sound power levels of air-handling units. Although this method is easy to do, it can be inaccurate. It can produce results that deviate from tested data by as much as ±15 dB. For more accurate sound data, AHRI has established Standard 260, which is a method of rating sound data for ducted air-handling equipment. It is intended to be a guide for the industry, including HVAC manufacturers, engineers, installers, contractors, and consumers. AHRI Standard 260:

- Strengthens testing and calibration procedures
- Provides repeatable results
- Uses a reverberant-room approach, a mapped sound-rating concept, and reference sound-source calibration
- Is application driven
- Includes ducted outlet, ducted inlet, and casing (radiated) test configurations

It is important to note that sound data for Trane air handlers is taken per AHRI Standard 260. This sound power standard covers eight octave bands (63–8000 Hz) and is unweighted (no dB corrections). AHRI Standard 260-tested sound data can be found in TOPSS.

Minimize Sound Source

Controlling noise at its source is the most cost-effective solution for providing quiet comfort in the space. Source attenuation can eliminate the need for duct-mounted silencers and thereby lower fan operating costs. The key to a quiet design is to know which options and layouts have a sound source that achieves the target NC level when reduced by space attenuation. It all starts with accurate, tested sound data, and Trane has the most complete sound power data in the industry.

The design process involves predicting the unit sound power and projecting it into the space, then optimizing the path attenuation (ductwork, ceilings) and the unit sound (fans, plenums) to get the lowest cost system that meets the requirements. Designing the right unit is a matter of experience and solid acoustical data. Obviously, the quieter the sound source, the less path attenuation is needed in the sound paths. Minimizing the sound source, using a quieter fan, or using more source attenuation increases the initial cost of the air handler, but is generally offset by significant path-reduction cost savings.

Figure 16. Plenum fans help reduce noise levels.

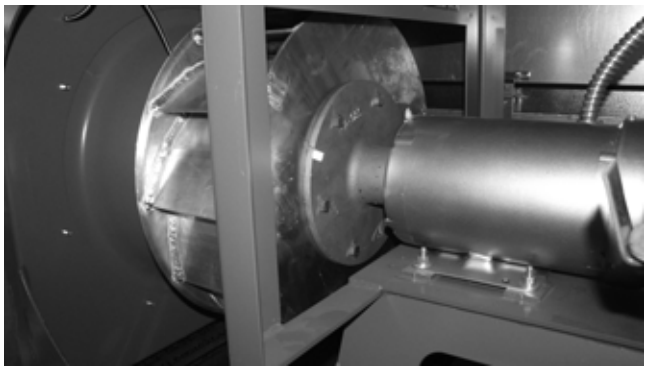

Trane air handlers have many features to optimize the source sound level for job requirements while minimizing the cost of the air handler including:

- *A variety of fan types*. Allows you to minimize the sound generated by the fan and to optimize your cost no matter what the application.
- *Discharge plenums.* Two-inch discharge plenums reduce turbulence and create an end reflection that dampens low-frequency sound. The 2-inch perforated liner option attenuates higher frequency sound.
- *Turning modules.* Used to turn the air and reduce turbulence. They work as effective, low-cost silencers.

For more information on how to apply these options in your air handler, contact your local Trane sales representative.

Energy-Efficient Performance

Recover Energy

Increased ventilation airflow requires more energy to heat or cool and can significantly affect operating costs. Bringing in more fresh air when it is cold outside also increases the risk of coil freeze-up. Trane airside energy-recovery solutions address both energy consumption and coil protection by recovering heat from the exhaust air stream to pre-condition outdoor air entering the building.Trane has many factory-packaged energy-recovery solutions including:

- Coil-runaround loops to recover sensible energy (see Figure 17).

Figure 17. Coil-runaround loops recover sensible energy

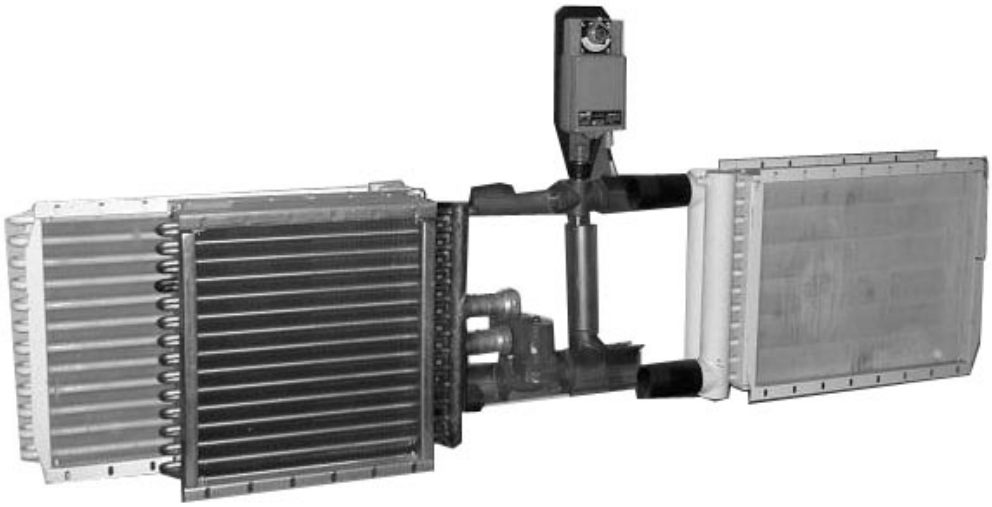

Reduce Energy Consumption

Figure 18. Traq dampers may reduce energy consumption.

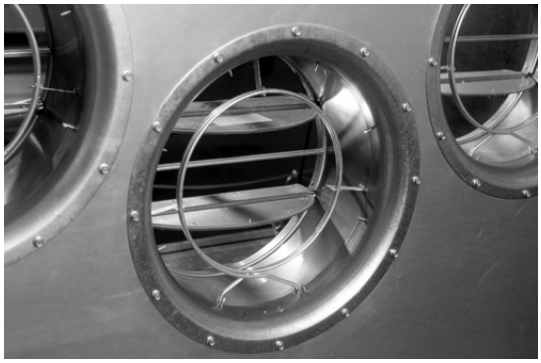

Standard air-handling units tend to bring in more outdoor air than is necessary to ensure that the amount of ventilation air meets the requirements of ASHRAE Standard 62.1. As a result, the air-handling system works harder to condition the air and uses more energy than might be necessary.

The Traq™ damper, an AMCA 611-certified airflow monitoring solution, measures and controls ventilation airflow to assure that the requirements of ASHRAE Standard 62.1 are met without excessive demand on the air-handling system. As a result, heating and cooling coils, pumps, chillers, and boilers can work at part load, reducing energy consumption.

Figure 19. Customizable plenum openings

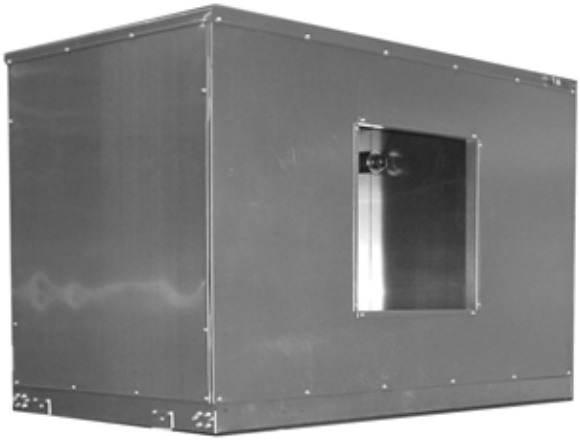

Discharge and inlet openings of the Performance air handler can be customized to reduce static pressure loss and lower energy consumption. Opening types can be specified in size to match mating duct shape, rectangular, round, or bellmouth fittings, to minimize transition losses.

Increase Operating Efficiency

The Trane EarthWise™ system is a design philosophy that uses low flow rate and low temperature on both the waterside and airside, along with high-efficiency equipment. Along with reducing emissions, it also reduces first cost, lowers operating costs, and improves the acoustical characteristics and comfort of the HVAC system. Low-temperature, low-flow systems can challenge conventional cataloged air-handling units. The flexibility of the Performance air handler makes it ideally suited for low temperature applications:

- Trane has developed a unique high-efficiency fin surface that allows face velocities in excess of 625 fpm without moisture carryover. The fins have been engineered and tested to meet these higher face velocities at a given set of design conditions. This allows you to utilize the latest in airside heat transfer to further improve the efficiency of the overall system by lowering the coil approach temperature.
- The ability to choose the exact number of fins per foot of coil surface allows heat transfer and air-pressure-drop performance to be tuned to specifically meet project needs.
- The wide array of fan options lets you choose the right fan for the application.
- Factory-engineered, -mounted, and -tested controls provide the added insurance that the airflow sensors and sequences meet your requirements.
- Further system enhancements can be made by taking advantage of the latest controls technology with fan pressurization control (required in most variable-air-volume systems per ASHRAE Standard 90.1) and/or ventilation reset of the outside air damper based upon occupancy levels in the space.

Proven Performance

AHRI Standards

Figure 20. AHRI Standard 430

Figure 21. AHRI Standard 410

Trane combines comprehensive performance certification by AHRI with thorough laboratory testing and advanced manufacturing methods. Together, these elements help assure that each Trane air handler operates predictably and reliably throughout the life of the unit.

Unlike other rating methods that check fan performance alone, Trane units are performance-tested in accordance with AHRI Standard 430. This certification process evaluates the air handler on the basis of airflow, static pressure, fan speed, and brake horsepower.

Heating and cooling coils are rigorously tested and certified with AHRI Standard 410 to assure that they, too, deliver published performance.

AHRI Standard 260 is the first ducted-air-handler sound rating procedure. It is intended to provide engineers with better, more accurate, ducted sound power levels so that they can design quieter and more cost-effective comfort systems. Sound ratings for Trane air handlers have been developed from extensive AHRI Standard 260 testing and laboratory data.

UL Listing

Trane air handlers are UL-listed to U.S. and Canadian safety standards.

AMCA Certification

Trane utilizes AMCA certification for airflow measuring stations. Trane certifies that the Traq™ damper shown herein is licensed to bear the AMCA Seal. The ratings shown are based on tests and procedures performed in accordance with AMCA Publication 611 and comply with the requirements of the AMCA Certified Ratings Program.

This certification program provides the engineer and owner assurance that manufacturer-published performance ratings for airflow measurement stations are accurate and repeatable. Trane Traq dampers are certified with the integral ventilation control module (VCM) which converts differential pressure to an electronic signal for control.

Canadian Registration Number (CRN)

The Canadian Registration Number, or CRN, is given to companies that comply with Canada's Technical Safety Standards Act concerning pressure vessel safety. In Trane air-handling systems, the CRN applies to coils classified as Category H fittings. Most government and industrial customers require the HVAC supplier to have a CRN. Trane has earned a CRN for all steam and water coils. used in the Performance air handler.

Demand Flow Technology

Our state-of-the-art manufacturing facility employs a system of "total quality checks" and verifications at each workstation to ensure consistent quality. And with implementation of Demand Flow® technology, we can better serve you by providing greater product flexibility, ever-improving product quality, and shorter manufacturing cycles.

ISO Certification

Certification by the International Standardization Organization (ISO) ensures that an organization can consistently deliver a product or service that meets the customer's contractual requirements by following documented processes. The ISO 9001 quality assurance model establishes the requirements for an organization whose business processes range from design and development to production. Having the quality management system of our manufacturing plants ISO 9001-certified directly benefits Trane customers because our continuous process improvements can reduce business costs, improve product quality, and enable faster ship cycles

HVAC Design Fundamentals

In essence, an air-handling unit, or AHU, is exactly what its name implies: a device that “handles” (moves and/or conditions) air. It accomplishes this based on the functions required by a given application, as well as the arrangement of components necessary for those functions.

Trane air handlers can accommodate an extraordinary degree of design versatility, but in order to apply that versatility to each unique application, an HVAC designer must:

- Design the air handler in a manner consistent with good HVAC design practices.
- Understand the impact of ASHRAE Standard 62.1, *Ventilation for Acceptable Indoor Air Quality*, and ASHRAE Standard 90.1, *Energy Standard for Buildings Except Low-Rise Residential Buildings*, on AHU functions and design.
- Know how specific components can address application requirements, with arrangements optimized for job requirements, thermal performance, and acoustical performance.
- Deliver the performance you have designed with a well-functioning control system.

Provide Proper Ventilation

Ventilation is the process of diluting the build-up of contaminants by introducing clean, fresh outdoor air into buildings. The lack of proper ventilation is identified as a leading cause of poor indoor air quality (IAQ) problems. ASHRAE Standard 62.1 sets the minimum ventilation rates and specifies basic HVAC equipment and system requirements to provide “acceptable indoor air quality.” ASHRAE Standard 62.1 is considered the standard of care for designers to assure good IAQ in commercial buildings.

Assuring proper ventilation levels at all operating conditions can be challenging for a designer. Fixed outdoor-air damper arrangements on variable-air-volume systems can result in severe under-ventilation of the occupied spaces at part-load conditions. The Performance air handler is available with the patented Traq™ outdoor airflow measurement and control damper, which can precisely control the volume of ventilation air entering the system and even dynamically vary the amount in response to specific operating conditions. With the Traq damper, the amount of outdoor air can be continuously logged using a Tracer Summit™ building automation system to document proper ventilation.

Maintain Building Pressure

An important aspect of establishing outdoor-air requirements is equalizing outdoor-air and exhaust-air volumes to maintain proper building pressurization (see Figure 22). *Building pressurization* describes an air-handling strategy that regulates pressure differences across the building envelope and between zones or rooms by adjusting the amount of air that is supplied and removed. The goals of this strategy are to:

- Assure proper distribution of conditioned and ventilation air throughout the occupied space
- Avoid discomfort due to temperature stratification and drafts
- Prevent infiltration of unconditioned air
- Confine odors and contaminants to specific areas within the building

Figure 22. Maintain proper building pressurization

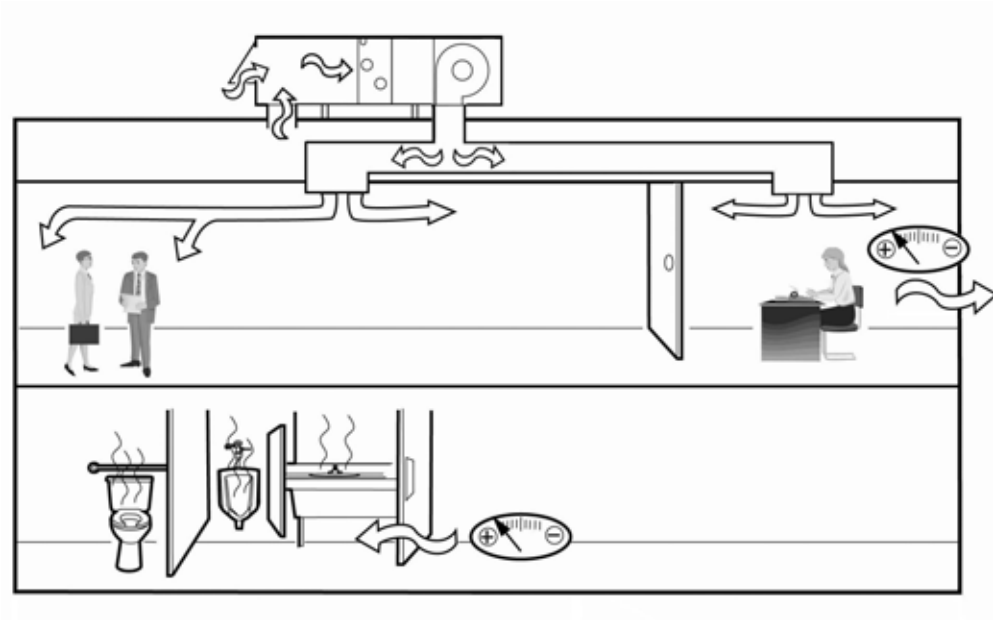

Building-envelope pressurization is typically achieved by incorporating either an exhaust fan and economizer or a return fan and economizer in the air handler design. Careful analysis is required to determine which approach best suits the unique requirements of each application. To better understand the differences between exhaust-fan and return-fan systems, consult your local Trane sales representative or refer to applications engineering manual, *Building Pressurization Control* (AM-CON-17).

Protect Coils from Freezing

Figure 23. Protect coils from freezing by addressing air stratification

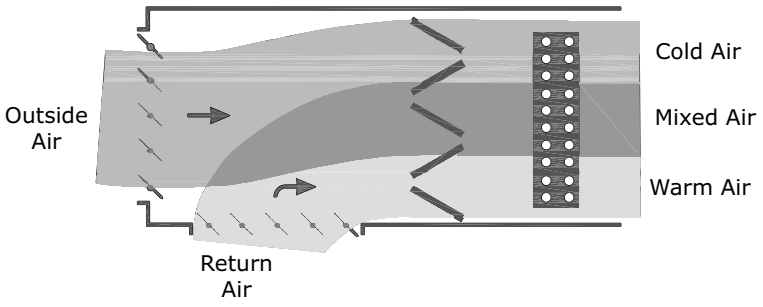

Figure 24. Low-limit sensor

When bringing more outdoor air into the air handler to satisfy the ventilation requirements of ASHRAE Standard 62.1, it increases the likelihood of air stratification (see Figure 23). If a layer of freezing air moves through the air handler, it can damage unprotected, hydronic cooling and heating coils. Traditional freeze protection includes a low-limit thermostat (see Figure 24) (installed on the face of the cooling coil) that trips when it detects a dangerously low air temperature. When this happens, it stops the supply fan, closes the outdoor air damper, and ultimately degrades the building IAQ.

It is important to design the air handler so that it effectively treats the required amount of outdoor air—regardless of temperature—without risking coil damage, tripping the low-limit thermostat, or compromising indoor air quality. Trane has several means of providing coil protection. Choose the technique that best suits the application requirements.

- *Drain the coils.* This approach necessitates vent and drain connections on every coil, plus shutoff valves to isolate them from the chiller(s).
- *Add glycol and an inhibitor to the cooling system water.* The glycol lowers the water freezing point, and the inhibitor helps to resist corrosion.
- *Introduce ventilation air downstream of the cooling coil* with dual-path or bypass techniques.
- *Preheat the outdoor air stream.* Use a traditional or integral face-and-bypass steam coil or a hot hydronic coil to raise the air-stream temperature above freezing.

Filter Contaminants

Particulates

The Environmental Protection Agency (EPA) and ASHRAE recommend that the concentration of particulates in the air not exceed 0.05 mg/m^3 (measured as an annual mean). This guideline is established in an EPA PM-10 standard which focuses on smaller particulates (<10 microns) that are likely responsible for adverse health effects because of their ability to reach the lower regions of the respiratory tract.

ASHRAE Standard 62.1 and the U.S. Green Building Council LEED rating system emphasize the importance of including appropriate filters in the air handling system to effectively control particulate contaminants. Both establish minimum requirements for filter performance applied within a commercial building based on ASHRAE Standard 52.2, Method of Testing General Ventilation Air-Cleaning Devices for Removal Efficiency by Particle Size. This standard establishes a test procedure for evaluating the performance of air-cleaning devices as a function of particle size (0.3 to 10 microns). A minimum efficiency reporting value (MERV) is assigned to a filter based on its efficiency in three different particle-size ranges (0.3 to 1 microns, 1 to 3 microns, and 3 to 10 microns). A higher MERV rating indicates a greater ability to remove high quantities of small particles from air (see Table 1 on page 19).

ASHRAE Standard 62.1 recommends a minimum MERV 6 filter, while the USGBC LEED rating system recommends a minimum MERV 8 during the construction cycle and MERV 13 during normal operation. National, state, or local codes established by government bodies or occupational groups may dictate more specific or stringent filtration requirements.

Figure 25. Use proper filtration

Gases and Vapors

The presence of various undesirable gases and vapors (particularly formaldehyde, radon, oxidants, and volatile organic compounds, or VOCs) indoors can be detrimental to building occupants, materials, and contents. Controlling VOC concentrations is particularly challenging—hundreds of them are present, few are unique to any one source, and there are many potential sources, some of which emit several VOCs.

A common way to control gaseous contaminants is to dilute them with outdoor air. This approach is appealing because many VOCs defy individual treatment. However, it is only practical if the quality of the outdoor air is suitable *and* if the resulting supply airflow is consistent and appropriate *and* if it mixes effectively with the air in the occupied space.

Minimize Microbial Growth

Figure 26. Keep surfaces clean

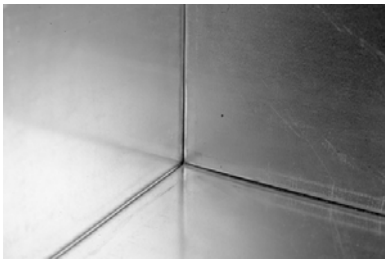

Although filtration effectively removes a number of common particulate and gaseous contaminants from the building environment, microbiological, or *microbial*, contaminants such as fungi (mold and mildew) and bacteria are sometimes too small to be filtered entirely from the air stream. To help control microbial growth, design the air handler to include:

- Non-porous, cleanable interior wet surfaces
- Easy access to all areas of the air handler for inspection, service, and cleaning.

Regular cleaning and disinfecting with nonpolluting cleansers and antimicrobial coatings also helps, but none of these measures totally eliminates the growth of ever-present microorganisms. Consequently, moisture control becomes another important means of combating microbial contaminants.

Water Management

Cooling coils collect water from the passing air stream as they cool and dehumidify it. If not properly addressed, this condensed moisture encourages mold, mildew, and other microorganisms to colonize and breed. To reduce the likelihood of microbial growth:

- Reduce moisture carryover by sizing the cooling coils for proper airflow velocities. Trane coils can be sized for velocities in excess of 625 fpm without moisture carryover, depending on air conditions, coil size, and coil-fin type and spacing. Refer to "Coil Data" section on page 85 for the moisture-carryover curves and details about allowable velocities.
- Specify drain pans sloped in two planes to eliminate stagnant water conditions and to promote positive drainage.
- Locate coils on the second level of a stacked air handler to provide adequate trapping height.
- Properly size condensate traps to ensure proper drainage. See Figure 27.
- Promote cleanability by providing adequate space around the unit, easily removable access panels, and a solid steel liner to isolate insulation from the air stream and to facilitate cleaning. Also, provide extended drain pans to allow for periodic cleaning.
- Condition the mechanical equipment room to prevent condensation on piping, ductwork, mechanical equipment, and other surfaces.

Figure 27. Drain pan trapping for positive and negative pressure applications

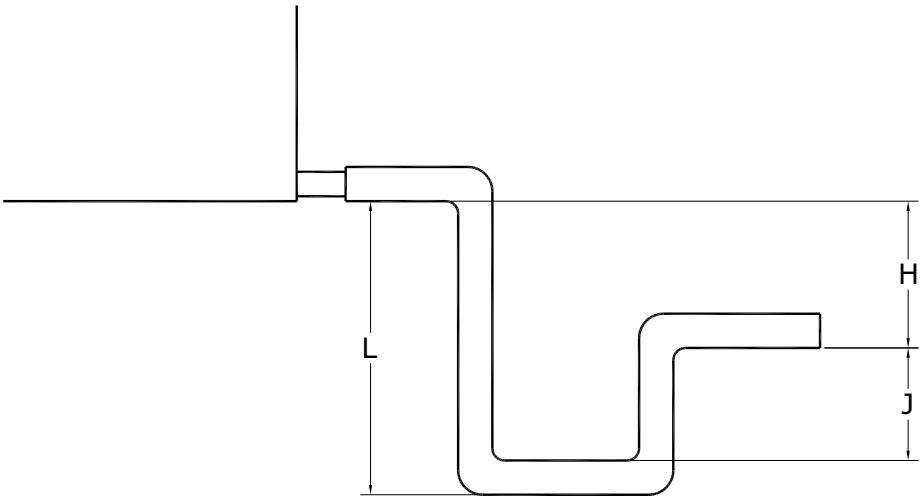

Drain pan trapping for section under negative pressure

L = H + J + pipe diameter where:
H = 1 inch for each inch of negative pressure* plus 1 inch
J = 1/2 H

*Negative pressure = total unit static pressure at worst case (loaded filters) minus external pressure

Drain pan trapping for section under positive pressure

L = H + J + pipe diameter where:
H = 1/2 inch (minimum)
J = 1/2 inch plus the unit positive static pressure at coil discharge (loaded filters)

Dehumidification

ASHRAE Standard 62.1 observes that “high humidities can support the growth of pathogenic or allergenic organisms” and suggests that the relative humidity of the occupied space not exceed 60 percent. Higher humidities also require lower supply-air temperatures for thermal comfort. Most climates require dehumidification to achieve this design goal. Dehumidification can be accomplished by removing moisture from the air, that is, condensing the water vapor on cooling coils.

However, cooling coils can over cool the occupied space when dehumidifying at sensible part-load conditions. There are several ways to control to both humidity and temperature at part load conditions.

- Use a VAV air handler versus a constant volume air handler. This can improve part load dehumidification.
- Use a Split Dehumidification Unit (SDU) to improve dehumidification by treating the ventilation air separately.
- Use a s Dedicated Outside Air Unit, DOAS, to dehumidify the ventilation air.
- Use a reheat coil, which can be accomplished using recovered condenser heat energy or with standard electric or hot water coils.

See “Dehumidification” on page 41 for more details on dehumidification options.

Humidification

Low relative humidity - below 30 percent - in an occupied space is also undesirable because it requires higher supply-air temperatures for thermal comfort and promotes static electricity. Raising the space humidity to an appropriate level requires a humidifier to inject water particles into the passing air stream. To avoid promoting microbial growth, the unit design must assure that the injected water is fully absorbed within the air handler *without* collecting on its walls or components.

Three types of commercial humidifiers are generally used in central-station air-handling systems: wetted media, atomized water, and steam. Of these types, ASHRAE Standard 62.1 prefers steam “as the moisture source for humidifiers.” The temperature and pressure properties of steam make it easy to introduce directly into the passing air stream and encourages complete absorption in a short distance. Trane standard humidifier sections incorporate all the distance required for absorption to occur.

Application Considerations:

- Never position the humidification section immediately downstream of a housed fan or blow-thru coil section.
- Extra dispersion distance may be needed if the humidification section is placed upstream of a final filter or electric heat coil.
- Vertical airflow turns immediately upstream and downstream of the humidification section necessitate a large section.

Provide Quiet Comfort

Acceptable sound levels inside a building can improve occupant comfort and productivity. In fact, achieving an acceptable acoustical environment today is almost as important as simply conditioning it. To meet space sound levels, be sure to optimize the noise source (the air handler) using path attenuation (ducts, wall, and room carpeting).

The sound source can be projected using Trane's TOPSS selection program or with the Trane *CLCHL$_W$* program. The sound path can be projected using the Trane Acoustical Program (TAP). Compare the resulting NC projection with the designed value. If the NC projection is too high, the air handler can be made quieter with a selection focused on acoustics, or the path attenuation can be increased—or both strategies can be combined. In the end, the projection should meet the NC requirements for your job.

Creating quiet spaces is increasingly difficult because of the trend toward "IAQ-hardened" systems. "IAQ hardening" involves removing fiberglass insulation, which acts as a sound absorber, from inside the ducts and even the units. Without this insulation, the air handler makes too much noise.

With Trane's acoustic options and the TOPSS selection program, you can create the unit you need for your quiet application. With these options, you can select an air handler that is more than 20 dB quieter than a conventional unit. The starting point is the Trane AHRI Standard 260 sound database.

Trane sound power ratings cover eight octave bands (63–8000 Hz). Data is collected in one of Trane's ANSI 12.32-qualified reverberant rooms.

To determine the most cost-effective acoustical solution for a given application, follow these steps:

1. Select the unit and predict the unit sound power using the TOPSS selection program.
2. Project the sound to the space using TAP.
3. Optimize the unit sound (fan, plenums) with the path attenuation (ductwork and ceiling) for the lowest first cost that meets the sound requirements.

Figure 28. Sound data is collected and tested by Trane acousticians.

Table 2 summarizes the noise reduction ideas accumulated by Trane engineers during four decades of experience with central-station air handlers. Use the TOPSS program to predict the effect of each idea.

However, for acoustically sensitive applications, we strongly recommend that you work with your local Trane sales representative to find the most cost-effective solution that meets your job requirements.

Table 2. Noise reduction suggestions

Targeted Sound	Suggestions
Overall unit sound power (L_W)	• In VAV systems, use variable-frequency drives for fan modulation. • Change fan types. • Increase the fan size. • Use a central exhaust fan rather than a return fan.
Discharge sound power	• Use discharge plenums. • Use outlet silencers. • Use perforated walls. • Use multiple-discharge plenum outlet ducts. • Use discharge plenums with side openings.
Inlet sound power	• Use a large inlet plenum. • Use inlet silencers. • Stack the inlet sections.

Application Considerations

The first things to consider when selecting an air handler for any given application include:

- *Design*. Which overall system design best suits the required function?
- *Arrangements*. What is the best section arrangement for the specified function and layout?
- *Components*. Which components should be selected to support the function, layout, and arrangement of the application?

Air Handler Design

Which design best suites the application? After determining the required airflows and functions for a particular application, the HVAC designer must determine which one of two path layouts for outdoor air best serves the application: single-path or dual-path.

Single-Path Design

Single-path AHUs (see Figure 29) rely on one outdoor air path. Depending on application requirements, that path may provide ventilation air only or both ventilation air and economizing air for natural, non-mechanical cooling. Components for filtering and tempering the air are arranged in series. The single-path layout can accommodate passive or powered return- and/or exhaust-air paths as well as energy recovery.

Figure 29. Single-path design

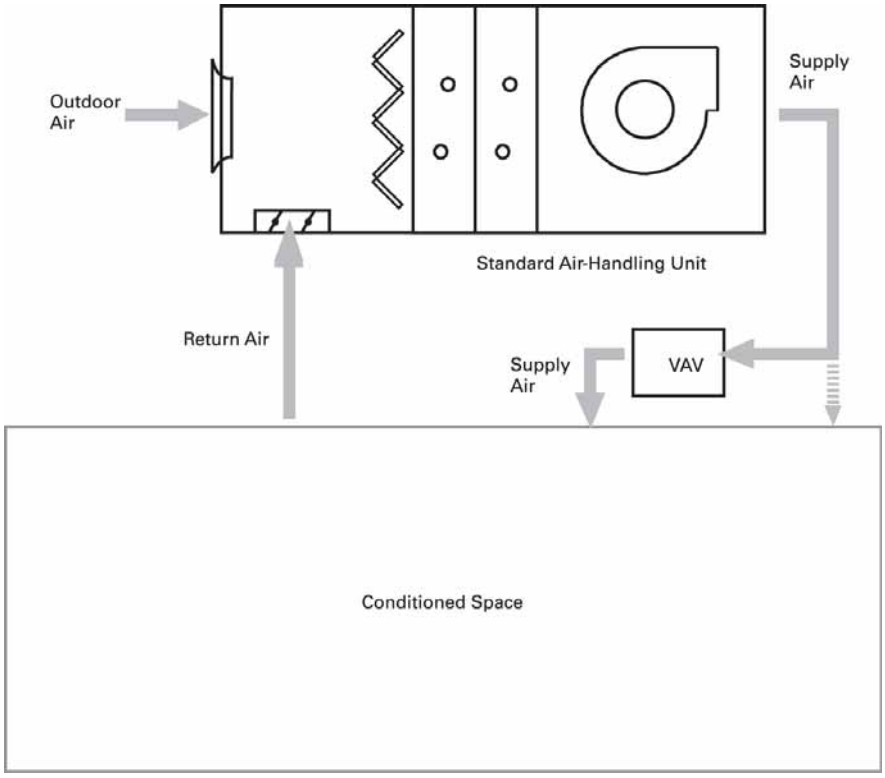

Dual-Path Design

Dual-path AHU (see Figure 30) layouts provide two air paths. Like a single-path design, dual-path designs can incorporate basic outdoor air, recirculation, exhaust-air, and energy-recovery functions. However, one path is dedicated to handling ventilation air to specifically address ASHRAE Standard 62.1 requirements. Each path is provided with its own air treatment components such as filters and heating and cooling coils.

Application considerations:

- Reduces or eliminates reheat requirements, while providing an effective means of dehumidification for loads with low sensible-heat ratios (high latent cooling requirements)
- Avoids increasing supply-fan static pressure due to high pressure drop components in the ventilation air stream (increases latent cooling and filtration capacity without increasing fan size)
- Permits downsizing of the ventilation-path components
- Enables compliance with the ASHRAE Standard 62.1 requirement for measuring outdoor airflow without significantly increasing the first cost of the air handler
- Provides a cost-effective means to increase ventilation airflow in an existing system
- Reduces cost by reducing the number of units (dedicated outdoor-air units can be eliminated).

Figure 30 represents a sample dual path configuration. For more design options, see Trane Applications Manual for Dehumidification in HVAC systems (SYS-APM004-EN).

Figure 30. Dual-path design

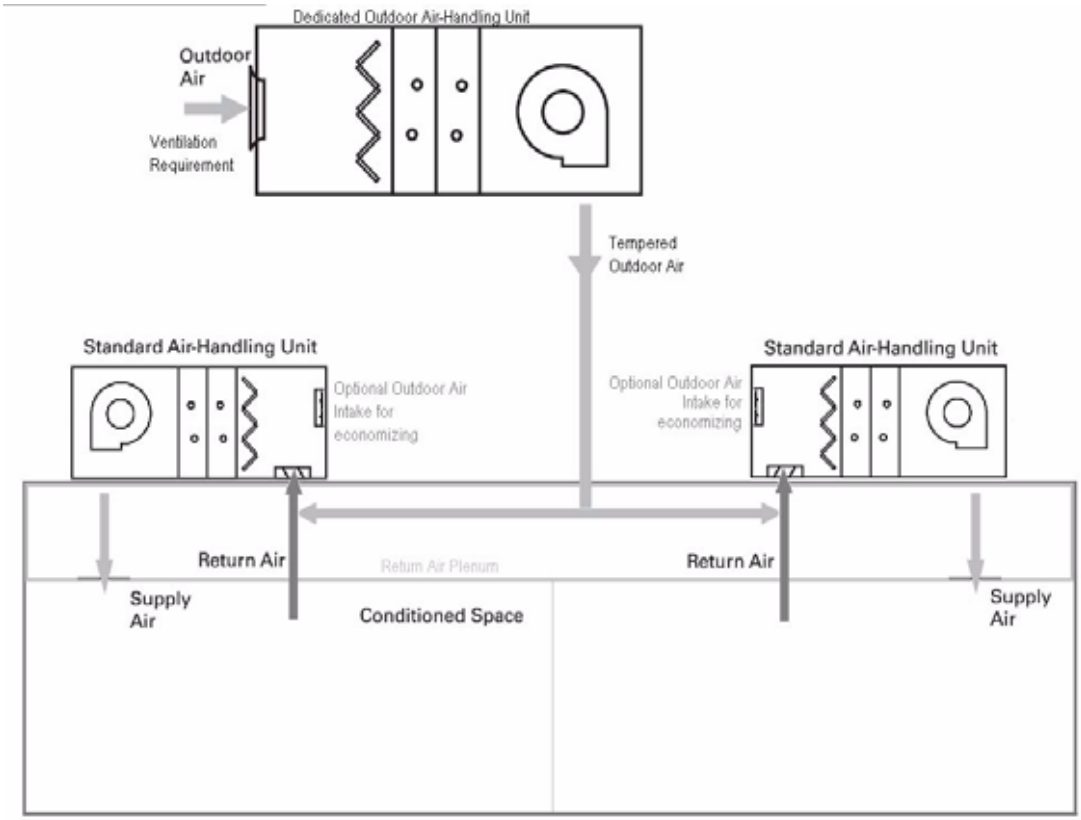

Standard AHU Arrangements

To complete the air-handling system, the sections must be physically arranged in a way that fits the available space. Conventional descriptions of air handler arrangements, *draw-thru* and *blow-thru*, reflect the means of establishing airflow through the coil based on the position of the coil relative to the fan: the fan either draws air through a coil located upstream or blows air through a downstream coil.

Trane adds another dimension to air handler arrangements, letting you combine sections by stacking them on top of each other in space-saving configurations, by coupling them together in a side-by-side arrangement with transition panels, or by combining both techniques. Careful evaluation of the merits of each arrangement is a critical part of the design process.

Draw-Thru Arrangements

A draw-thru AHU arrangement places the coils and filters upstream of a ducted supply fan. It can be single- or dual-path.

Figure 31. Horizontal draw-thru arrangement

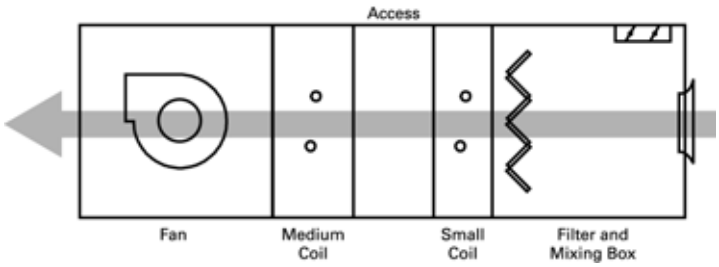

Horizontal Draw-Thru

Accepted system design practices are generally the only restrictions in a horizontal draw-thru application (see Figure 31). However, certain application rules must be followed to promote proper airflow through filters and coils.

Figure 32. Vertical draw-thru arrangement

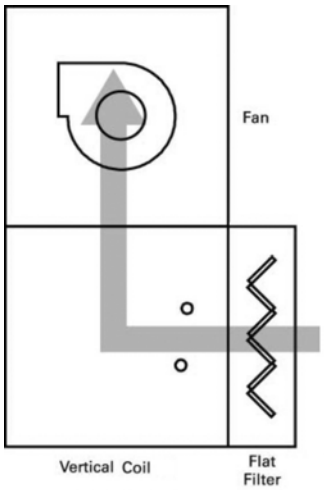

Vertical Draw-Thru

Trane air handlers in a vertical draw-thru arrangement typically result in a shorter footprint than horizontal draw-thru units. This arrangement stacks a fan on top of a vertical coil section. When designing an air handler in this configuration:

- The bottom deck must be equal to or longer than the fan section to avoid creating a “cantilever” effect.
- Fan performance in vertical draw-thru applications include derates found in Table 3 to account for the airflow impingement by coils installed in vertical coil sections. TOPSS includes these derates in the selection of fans when installed in a vertical draw-thru application.

Table 3. Derates for vertical draw-thru applications

	AF Fans	FC Fans
BHP Multiplier	1.110	1.090
RPM Multiplier	1.035	1.025

Blow-Thru Arrangements

This type of AHU arrangement places the cooling coil downstream of the supply fan.

Figure 33. Single-zone blow-thru arrangement

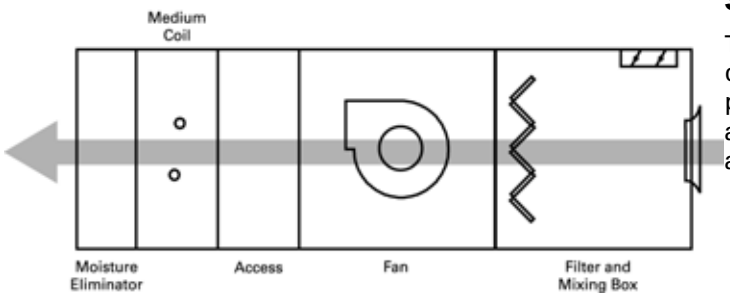

Single-Zone Blow-Thru

This type of arrangement (see Figure 33) can provide only one supply-air temperature from the unit. To promote proper air distribution through each section and to reduce the risk of moisture carryover, certain application considerations apply based on the fan type.

Stacked Units

A stacked AHU arrangement can be either draw-thru or blow-thru. It places the air handler sections on top of each other. This strategy can significantly reduce the length of the unit and provide better acoustical performance, yet has very little effect on unit static pressure drops.

Application considerations:

- Stacked section weight must not exceed the maximum stacking weight of the casing.
- Ductwork and dampers must not interfere with stacked sections.
- “Upper-deck” sections cannot overhang lower sections.

Arrangements for Specific Applications

Draw-thru and blow-thru arrangements for Trane air handlers can be engineered for specific applications, including those to maintain proper building pressure, dehumidify, and recover energy.

Building Pressurization

Return fans and exhaust fans are used to maintain building pressurization. A Trane air handler can include either of these components. To better understand the differences between exhaust-fan and return-fan systems, consult your local Trane sales engineer or refer to the Trane applications engineering manual, *Building Pressurization Control* (AM-CON-17).

Building Pressurization with Return Fan and Economizer

Figure 34 depicts a standard air handler with a return fan and an economizer for outdoor air. The return fan typically runs continuously to balance the amount of air supplied to and removed from the occupied space. Although this approach makes precise space pressurization control more difficult, it is better suited to applications with high return static pressures than the exhaust-fan alternative. If the supply fan is unable to handle system static pressure, the return fan is sized to overcome the external static pressure of the return duct. Of course, the larger size and constant operation of the return fan also means higher first and operating costs.

Application considerations:

- Size the *supply fan* to handle the static pressure requirements of a 100-percent *economizer* operation, including outdoor-air ductwork, dampers, filters, coils, other accessories in the outdoor air stream, and supply-duct static pressure.
- Size the *return fan* to handle the static pressure requirements of a 100-percent *return air* operation, including return duct, exhaust duct, and exhaust damper.
- Control the return fan to keep the outdoor/indoor static-pressure differential within design limits.
- Control the mixing box dampers to prevent all of them from closing simultaneously; otherwise, serious equipment damage could result.

Figure 34. Return fan and economizer arrangement

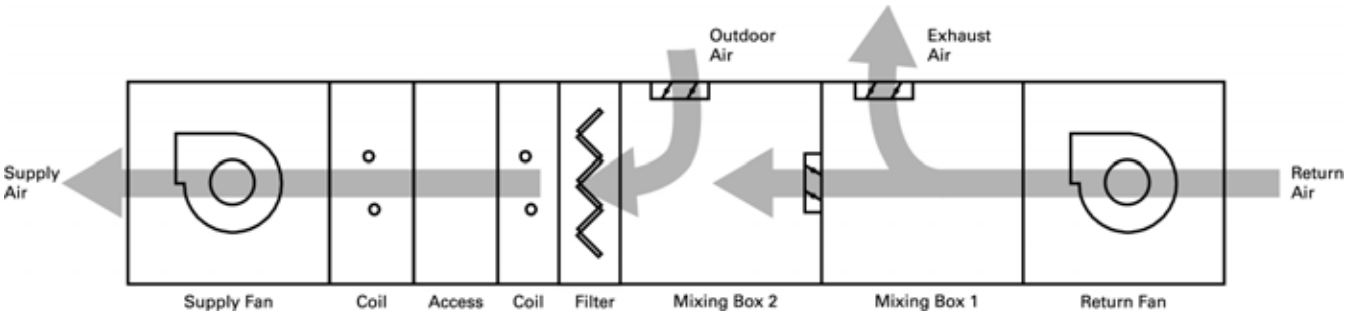

Building Pressurization with Exhaust Fan and Economizer

Figure 35 depicts a standard air handler with an exhaust fan and an economizer for outdoor air. To balance the amount of air exhausted from the building with the amount of air brought into the building, the exhaust fan modulates, running at full capacity only when the economizer brings in 100 percent outdoor air. When the economizer is at minimum and the exhaust fan is idle, dampers on the mixing box close to prevent outdoor air from being drawn into the air handler through the exhaust section.

The exhaust-fan-and-economizer combination provides strict space pressurization control, provided that the supply fan is sized to handle total system static pressure. Its first cost and operating cost are usually lower than the return-fan-and-economizer alternative, too. (An exhaust fan requires less capacity than a return fan and runs less often.)

Application considerations:

- Size the *supply fan* to handle the static pressure requirements of the higher of either a 100-percent *economizer* operation or 100-percent *return-air* operation.
- Size the *exhaust fan* to handle the static pressure requirements of a 100-percent *return-air* operation, including return duct, exhaust duct, and shutoff damper, when the unit is in full economizer mode.
- Control exhaust airflow to keep the outdoor/indoor static-pressure differential within design limits.
- Control the mixing box dampers to prevent all of them from closing simultaneously; otherwise, serious equipment damage could result.

Figure 35. Exhaust fan and economizer arrangement

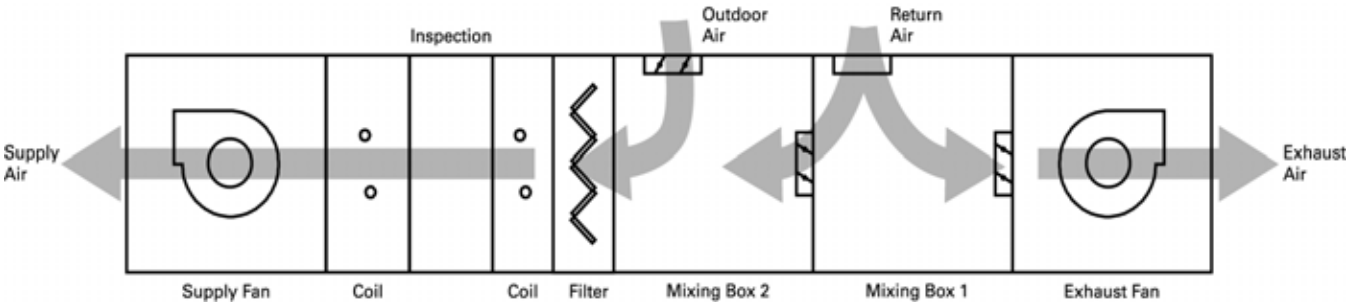

Dehumidification

Excessive humidity in buildings can encourage mold and mildew growth and thermal discomfort. To cost effectively address these issues, first isolate the conditioned space from the unconditioned space. (See Trane applications engineering manual, *Managing Building Moisture*, SYS-AM-15.) Next, remove the humidity.

The two primary humidity sources in most buildings are people and outdoor air. In any coil-based HVAC system, it is the cooling coil that dehumidifies the air. This coil must be on and air must pass through it for dehumidification to occur. In Trane air handler enhanced dehumidification units, the priority for the cooling coil is humidity control. Temperature control is secondary and is generally provided by a separate reheat source.

Dehumidification can be obtained using:

- Split dehumidification units (SDU)
- Series, coil runaround loops

Free reheat options with dehumidification include:

- Hot water heat-recovery coils
- Refrigerant heat-recovery H coils

Application Considerations:

- Single-duct, factory-packaged dehumidification unit.
- Provides excellent humidity control in recirculating units, achieving SHR down to 0.4 without using new energy for reheat.
- Can offer significantly lower operating costs and a low first cost.
- Can be used in retrofits.
- Uses standard Trane components.
- Alternative designs and configurations are available upon request.

Dehumidification with Coil Runaround Loops

Series, coil runaround loops (see Figure 36) consist of finned-tube water coils connected in a closed loop that is “wrapped” around an active cooling coil. Operation is psychrometrically similar to the air-to-air, fixed-plate heat exchanger. The first coil in the loop precools the incoming outdoor air. The active cooling coil absorbs more heat from the air stream and further dehumidifies the air to the design point. The second coil in the loop is placed after the active cooling coil and reheats the air with the heat absorbed by the first coil. Loop components include a pump to move the fluid within the loop and an expansion tank.

Series, coil runaround loops occupy little space and have a relatively low first cost. Like the series air-to-air, fixed-plate heat exchangers, series coil loops are only effective during the cooling season. Additional heating may be required on cool, humid or cold days.

Application Considerations:

- Provide free reheat at design conditions
- Allow downsizing of new energy cooling and reheat coils
- Add a minimal pressure drop through each coil (only 0.3 to 0.6 in. wg)
- Are available in all Trane units
- Can be fully modulated by varying water flow

Figure 36. Series dehumidification with coil runaround loops

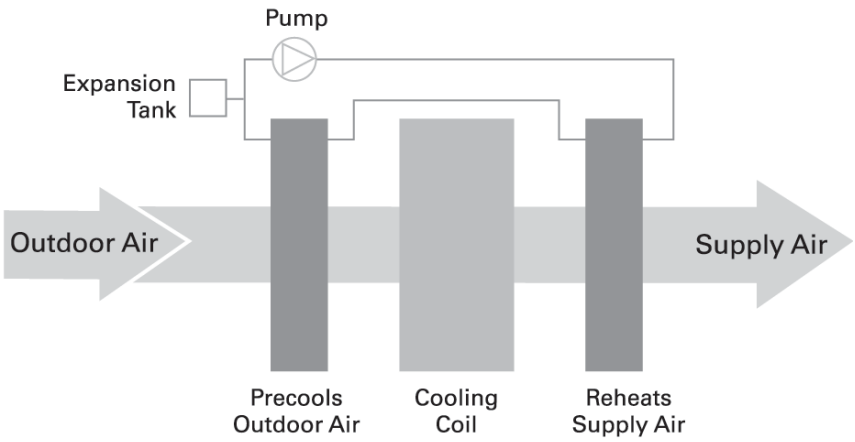

Dehumidification with Hot-Water Heat-Recovery Coils

Using waste condenser heat from the chiller or compressor is a simple way to provide dehumidification reheat. With this dehumidification strategy, a hot-water coil is installed after the active cooling coil. Hot water from the chiller—or from an auxiliary condenser on the chiller—is piped to this coil. Free reheat is available any time the chiller is on.

Application Considerations:

- Work with recirculating or 100-percent makeup-air units.
- Provide excellent humidity control at any sensible-heat-ratio condition without using new-energy reheat.
- Can reduce operating costs significantly.
- Can be used in retrofits.
- Use standard Trane components.
- Provide proven, low-cost technology.

Energy Recovery

Trane air handlers offer high-performance solutions for airside energy recovery:

- Runaround coil loops

Each of these technologies transfers energy between the exhaust and outdoor air streams. Total energy recovery wheels transfer both sensible and latent energy between the air streams, while the coil loop transfers sensible energy.

Energy-recovery arrangements:

- Reduce operating costs.
- Can reduce first cost by allowing downsizing of chillers and boilers.

Energy-recovery systems can offer excellent energy savings when properly applied. Economic considerations must be carefully evaluated to determine the payback period of any energy-recovery system.

Energy Recovery with Coil Runaround Loops

Outdoor-air and exhaust-air coil runaround loops recover energy that would normally be exhausted. They precool the outdoor air during the cooling season and preheat the outdoor air during the heating season. With coil loops, the outdoor and exhaust air streams do not need to be adjacent. This provides design flexibility for building renovations and new construction—at a first cost that is often lower than other methods of energy recovery.

Multiple exhaust and outdoor-air coils can be piped together with relative ease. Coil runaround loops use finned-tube hydronic coils in a closed loop to transfer energy. A typical runaround system is shown in Figure 37. The heat-transfer fluid pumped within the loop is usually an inhibited solution of ethylene glycol and water to avoid freeze up.

Coil loops offer complete separation of the air streams, thus eliminating any risk of cross-contamination. Loop components include the coils, a pump, expansion tank, and a three-way valve or variable-frequency drive (VFD). The expansion tank accommodates expansion and contraction of the internal fluid. The three-way valve or VFD modulates coil capacity. To prevent moisture in the exhaust air from freezing on the exhaust coil, the three-way valve can divert the warm fluid returning from the exhaust coil to the supply side of the coil.

Figure 37. Energy recovery with a runaround coil loop

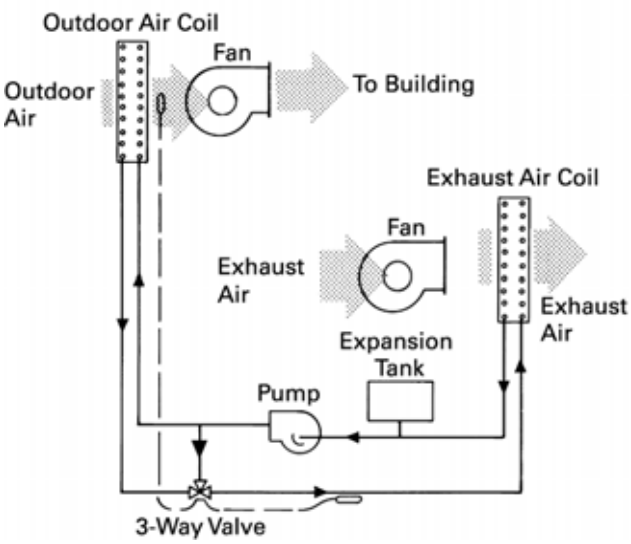

Application considerations:

- Typical coil-loop effectiveness ranges from 45 to 65 percent with equal airflow and no condensation. Adhere to standard guidelines regarding coil construction, based on conditions. (See Trane catalog COIL-DS-1 and engineering bulletin COIL-EB-19 for more information.)
- Coil performance and airside pressure drops can be determined using Trane selection tools.

Acoustics

Designers are often challenged to select and arrange the air handler components so that the inlet, discharge and casing-radiated fan generated sound power levels help create a quiet space. To accomplish this, the designer must choose the right fan and determine whether additional unit attenuation is necessary.

Choosing the Right Fan

Obviously, the quieter the noise source (in this case, the fan), the less attenuation is needed along sound transmission paths. Selecting a quieter fan often increases the initial cost of the air handler, but can be a cost-effective system solution because it:

- Reduces the need for path attenuation (e.g., silencers) by diminishing the sound level along all transmission paths
- Reduces energy consumption (i.e., a fan is normally quietest when running at the most efficient point on its operating curve), providing operating cost savings to offset the initial cost.

Trane acoustical tests have shown that a fan's sound power (Lw) level depends on three factors:

- Type/design
- Operating point on the fan curve
- Application requirements (e.g., critical octave band frequency)

Figure 38 and Figure 39 compare the inlet and outlet sound power levels of four different fans. Together, these charts demonstrate that fan inlet sound is not equivalent to fan outlet sound. More importantly, they underscore the need to obtain accurate, AHRI 260 tested sound data from the manufacturer so that appropriate source and/or path attenuation methods can be applied.

Trane gives designers a choice of many different fan types. See "Fans" section on page 52 for a summary of different fan application considerations and acoustical characteristics.

Figure 38. Comparison of discharge sound power by fan type

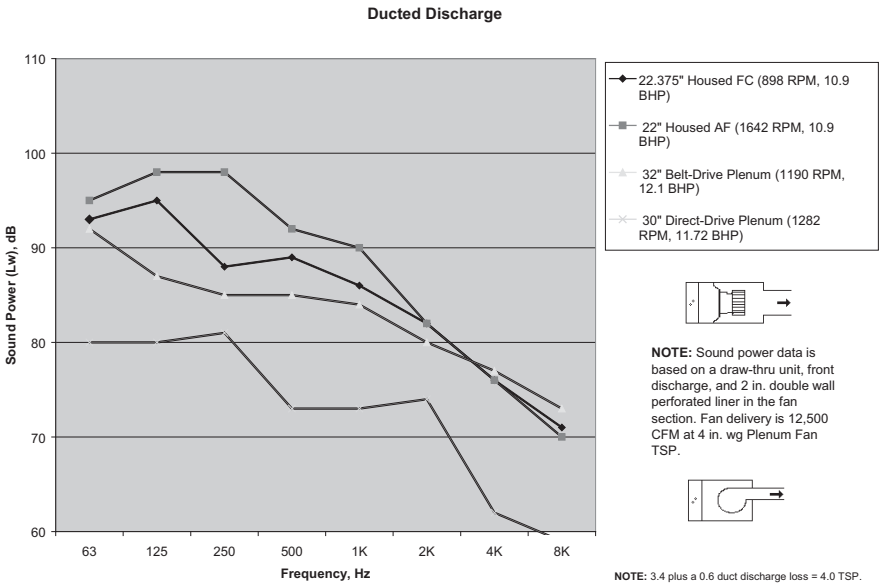

Figure 39. Comparison of inlet plus casing sound power by fan type

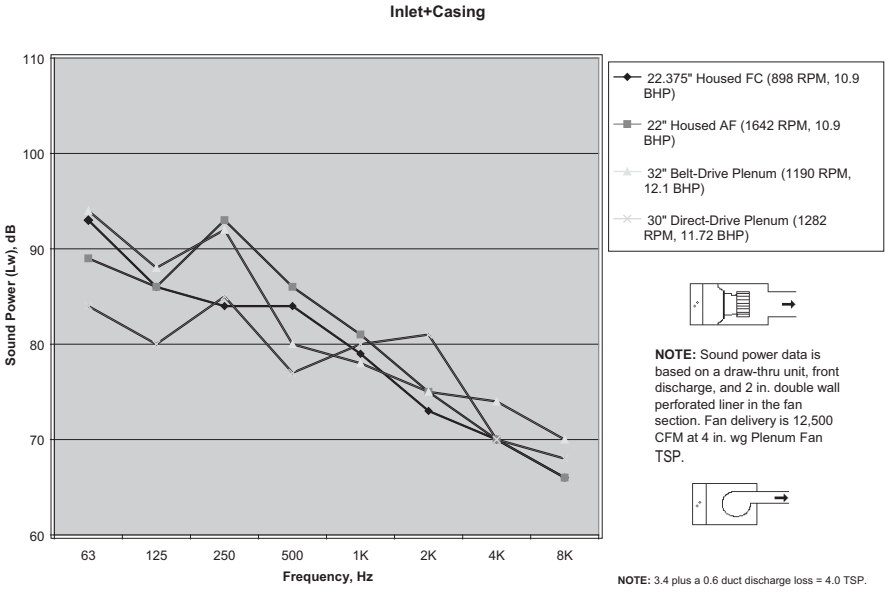

Components and Options

Performance air handlers adopt a ‘building-block’ approach to air-handling design. Each ‘building block’ or section contains one or more components that serve a specific purpose unique to each application. The required function, layout, and arrangement of the air-handling system determines which sections must be included for a particular application.

Access/Blank and Turning Section

Access or blank sections can be incorporated into the air handler design to provide access to internal components for cleaning, maintenance, and service or to promote proper airflow through the unit.

A turning section is a blank section that alters the direction of airflow and reduces turbulence. It can also serve as an effective sound attenuator. When compared to a field-mounted, rectangular duct silencer, the turning section is less expensive to install, has a lower pressure drop, and provides more predictable performance. Perforated lining in the turning module attenuates mid- to high-frequency sound.

Note: Only large and extra-large blank sections can be selected as turning sections.

Coils

Coils temper all (full-face) or part (modified-size) of the passing air stream by heating, cooling, or dehumidifying the air. To select the right coil for the unique requirements of the application, be sure to optimize its capacity, face velocity, pressure drop, and construction.

The unique H-fin design from Trane permits coil selections with face velocities in excess of 625 fpm without moisture carryover.

Table 4 shows the application considerations for the various coil types. Table 5 summarizes the available sizes for Trane coils.

Trane coil performance is certified in accordance with AHRI Standard 410. Coils containing ethylene glycol re also rated in accordance with AHRI Standard 410. Propylene glycol and calcium chlorate, or a mixture thereof, are outside the scope of AHRI Standard 410.

Typical coil-face velocities are 200 to 625 fpm for cooling and 200 to 800 fpm for heating. The convention to determine the coil connection side of a single-level unit is to stand at the leaving air side of the coil with the air blowing in your face.

Table 4. Coil application considerations

Coil type	Application considerations
Hydronic cooling and refrigerant (direct expansion) cooling	• Size the coil to prevent moisture carryover due to high airflow velocities. The high-efficiency design of Trane Type H fins allows much higher face velocities than traditional coils. It is possible to exceed 625 fpm face velocities without moisture carryover. Refer to the moisture carryover curves in “Coil Data” section on page 85 for velocity limits. • Properly size the condensate trap to provide positive drainage. • Specify two-way-sloped drain pans to eliminate level seams and promote condensate flow directly to the drain outlet. Use stainless-steel construction to extend drain-pan life. • Provide adequate freeze protection for chilled hydronic coils.
Hydronic heating	• Hot-water heating is an attractive option for buildings without a ready source of steam. Hot water from the chiller condenser circuit is excellent for providing free dehumidification reheat. • Providing effective freeze protection is more challenging with hot-water preheat coils than it is for steam. To minimize the risk of coil freeze-up, use face-and-bypass preheat coils and operate the hot-water coil at full capacity.
Steam heating	• Properly pipe and trap the coil to provide positive drainage. • Steam coils are less susceptible to freeze-up than hot water coils. Trane Type NS steam-distributing coils use steam pressure to blow condensate from the coil. Double-trap the coil for a virtually freeze-proof installation.

Table 5. Trane coil sizes

Coil tube sizes	Description
1/2-inch OD (outside diameter)	• Available in two face-area sizes per unit size- full-face and modified • Copper tubes • 0.016-inch or 0.025-inch tube wall options • Available in 2, 4, 6, or 8 rows • Aluminum fins available only; flexible, polymer e-coat optional
5/8-inch OD	• Available in three face-area sizes: unit (full face area), modified, and hot deck • Available in 1–4, 6, 8, or 10 rows in all sizes except hot deck (Hot deck coils are available in one or two rows.) • Available with 0.020-, 0.024- or 0.035-inch tube wall • Available with aluminum or copper fins, with or without flexible, polymer e-coat
1-inch OD	• Can be selected in unit and modified sizes • Modulating, steam-distributing-type coils, available in one row only • Available with 0.031-inch thick copper tubes or 0.049-inch thick red brass tubes and aluminum or copper fins. • Available with aluminum or copper fins, with or without baked phenolic coatings

1/2-Inch Coils

Half-inch coils are designed exclusively for use in Trane air handlers. They have 1/2-inch OD tubes, 0.016-inch or 0.025-inch tube walls, and are available in 2 to 8 rows. Although they offer fewer options than 5/8-inch coils, 1/2-inch coils have a lower first cost and larger face area. They also require less distance (section length), reducing the air handler footprint.

Half-inch coils may be selected for these applications:

- Chilled water
- Hot water
- Direct-expansion (DX) refrigeration (R410A)

These coils have aluminum fins and are available with or without a corrosion-resistant coating. All 1/2-inch chilled-water unit coils have copper headers with external-threaded steel-pipe connections.

Table 6. 1/2-inch unit coil types

Coil type	Description
UW	• Chilled water or hot water • General purpose • Single-row serpentine • 2, 4, 6, or 8 rows
UU	• Chilled water or hot water • Dual-row serpentine • Low water-pressure drop • High flow rate • 4 or 8 rows • Unit sizes 12–120 only
UF	• Refrigerant • Standard, intertwined, and horizontal-split circuiting • 4, 6, or 8 rows
UA	• Hot water • General purpose • Alternate tube feed • 2 rows

5/8-Inch Coils

Five-eighths-inch coils can be applied in all air handlers. Typified by 5/8-inch OD tubes, these coils can be configured with 1 to 10 rows, and 0.020, 0.024, 0.035, or 0.049-inch tube walls. Compared to 1/2-inch coils, 5/8-inch coils offer greater design versatility. However, they have a higher first cost, a smaller face area, and require a longer section for proper air distribution. These coils may be selected for these applications:

- Chilled water
- Hot water

These coils are available with aluminum fins (with or without a corrosion-resistant coating) or copper fins (with or without baked phenolic coating). All 5/8-inch chilled-water coils—except P2, P4, P8, and TT coils—have copper headers with external-threaded steel-pipe connections. P2, P4, P8, and TT coils have cast iron headers with internal-threaded connections.

Table 7. 5/8-inch shipping coil types

Coil type	Description	Coil type	Description
W	• Chilled water or hot water • Single-row serpentine • 3, 4, 6, 8, or 10 rows • One-row W coils have opposite-end connections.	D1	• Chilled water • Single-row serpentine • Drainable • 4, 6, 8, or 10 rows
5W	• Chilled water or hot water • Same-end connections • 1 or 2 rows	D2	• Chilled water • Dual-row serpentine • Low water-pressure drop • High flow rate • Drainable • 4,8 rows
WD	• Chilled water or hot water • Dual-row serpentine • Low water-pressure drop • High flow rate • 6, 8, or 10 rows • Unit sizes 10–120 only	P2, P4, P8	• Chilled water • Ultra-low flow rate • P2—two-tube feed (2, 4, or 6 rows) • P4—four-tube feed (2, 4, 6, or 8 rows) • P8—eight-tube feed (4 or 8 rows)
5D	• Chilled water or hot water • Dual-row serpentine • Horizontally split • Dual supply and return connections • Low water-pressure drop • High flow rate • 6, 8, or 10 rows • Unit sizes 21–120 only	TT	• Hot water • Low flow rate • Common duct coil • Two-tube feed
5A	• Hot water • Alternate-tube feed • Low flow rate • 2 rows		

Figure 40. Typical 5/8-inch coil

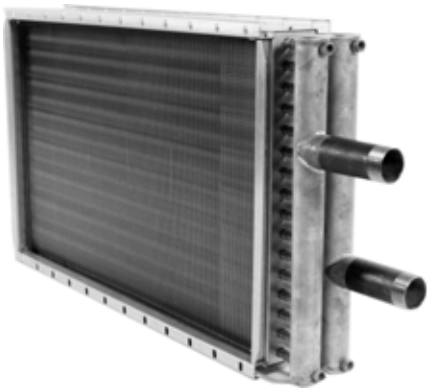

Figure 41. Typical 1-inch steam coil

One-Inch Steam Coils

All one-inch coils are steam coils. They are available with aluminum fins (with or without a corrosion-resistant coating) and copper fins (with or without a flexible, polymer e-coat). One-inch steam coils are one-row coils and have cast iron headers with internal-threaded pipe connections

Table 8. 1-inch steam coil types

Coil type	Description
NS	• Modulating steam • Steam-distributing type • NS—same-end connections • One row

Modified Coils

Modified coils are 5/8-inch, 1/2-inch, and 1-inch tube coils with reduced face areas. Use them with internal face-and-bypass dampers or in low-capacity applications.

Coil Runaround Loop

A runaround loop, used to recover sensible energy, consists of two finned-tube coils (air-to-water heat exchangers) piped together; one coil resides in the outdoor airstream and the other in the exhaust airstream. An expansion tank, pump, three-way temperature control valve and working fluid (usually an inhibited solution of ethylene glycol and water) complete the recovery system.

Since the outdoor and exhaust airstreams need not be adjacent, the runaround loop provides design versatility well-suited to building renovations – at a lower first cost than other methods of energy recovery. Complete separation of the airstreams also eliminates the risk of cross-contamination.

Application Considerations:

- Recovery is limited to sensible energy with an effectiveness that typically ranges from 60 to 65 percent.
- Together, the two finned-tube coils may contribute approximately 0.3 to 0.6 in. wg to system static pressure.

Dampers

Traq™ Dampers

Designed to measure and modulate outdoor airflow, the AMCA 611-certified Traq™ damper assembly consists of one to six butterfly-type dampers. The bell-mouth inlet of each damper guides air uniformly through a flow-sensing ring that accurately measures total and static pressure from 100 percent of nominal airflow down to 300 fpm through the damper. The damper assembly's ventilation control module (VCM) produces a 2-to-10-Vdc signal that is proportional to airflow, recalibrates itself once every 60 seconds, and automatically adjusts for temperature variations. Standard Traq and low-flow Traq dampers are available.

Application considerations:

- The Traq damper mixing box requires only one duct diameter of straight inlet duct (as much as 80 percent less than other airflow monitoring techniques).
- Connecting a Traq-damper-equipped air handler to a building automation system, such as a Tracer building management system, permits:
  - Dynamic calculation of the outdoor air needed to adequately ventilate a multispace VAV system and reset the outdoor-air setpoint accordingly to save energy.
  - Trend logs and custom reports to document compliance with ASHRAE Standard 62.1.

Diffuser

Figure 42. Diffusers provide even airflow.

A diffuser consists of pressure-equalizing baffles that are designed to provide even airflow across components downstream of a fan. The diffuser section is typically used immediately downstream of a centrifugal fan in a blow-thru filter, coil application.

Discharge Plenum

Figure 43. Discharge plenums can lessen low-frequency sound.

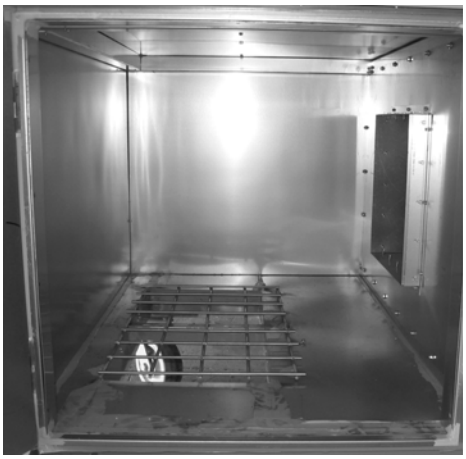

Before leaving the air handler, supply air can be ducted to a discharge plenum section. The rapid air-stream expansion as it passes into the plenum reduces turbulence and creates an acoustical end reflection that dampens low-frequency sound. Two configurations enable supply-duct connections from any side:

- *Vertical-mounted* plenum sections mount atop an adjacent section and can be increased 1.5 times or reduced 0.5 times to standard height minimizing field duct transitions. Openings can be factory- or field-cut.
- *Horizontal-mounted* plenum sections mount on the front of an adjacent section. Openings can be factory- or field-cut.

Vertical and horizontal discharge plenum openings can be tailored to the size, type and location to best fit the velocity and static pressure requirements, improving energy efficiency and sound. Round, rectangular, and bellmouth openings are all available.

Fans

Performance air handlers offer designers multiple types of fans—airfoil (AF) and forward-curved (FC) centrifugal, and airfoil plenum—and diameters to tailor air handler performance to application requirements. Table 9 summarizes and compares the characteristics and application considerations of these fans. When evaluating the merits of each fan type for a given application, consider the volumetric rate of airflow, static pressure, required sound characteristics, and space.

To verify that fan performance will satisfy design requirements, use the TOPSS selection program. The AHRI Standard 430-certified fan curves include the fan section casing effect. The catalog also discusses how ductwork connections, air density, fan and motor heat, drive losses, and use of high-performance (MERV 11 and higher) filters affect fan performance.

Depending on the fan-control method used, the fan can provide either a constant or variable volume of supply air. In a constant-volume system, the fan delivers a consistent amount of air and cooling and heating devices adjust the air temperature for occupant comfort. Because the fan runs at constant horsepower under all load conditions, system operating costs are higher than those of a VAV system.

Figure 44. Typical Trane fan

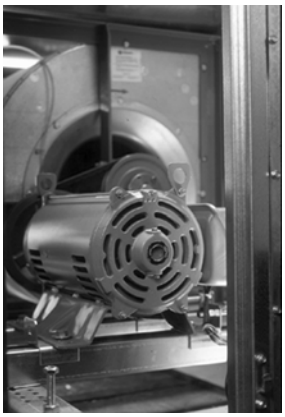

A VAV system provides occupant comfort by delivering a modulated amount of constant-temperature air. Usually, supply-duct static pressure determines how much air the fan provides. Varying fan horsepower with building load can offer substantial energy savings and do a better job of controlling space humidity.

Fan modulation is accomplished with a variable-frequency drive (VFD) that adjusts fan speed and airflow by varying motor speed. VFD modulation is quiet and energy efficient; it can also prolong the life of the fan motor by “soft starting” it.

Table 9. Fan summary information

	FC Fan	Backward-curved (BC) Fan	AF Fan	Plenum Fan
Fan type	**Centrifugal, housed**	**Centrifugal, housed**	**Centrifugal, housed**	**Unhoused**
Inlet	Double	Double	Double	Single
Airflow direction	Radial	Radial	Radial	Pressurized, all directions
Optimal pressure range	Low to medium (0 to 5 in. wg)	High (4 to 8 in. wg)	High (4 to 8 in. wg)	Medium to high (2 to 8 in. wg)
First cost (relative)	Low	Medium	Medium	High
Operating cost (relative)	Medium	Medium-high	Medium-high	Medium
Typical speed range	400–1,600 rpm	1,000–2,600 rpm	1,000–2,600 rpm	600–1,600 rpm
Blade shape	Curved	Curved	Airfoil	Airfoil
Acoustical characteristics	Significant air turbulence that quickly abates; little blade-tone noise	Significant air turbulence; strong blade tones in 250-Hz octave band	Significant air turbulence; strong blade tones in 250-Hz octave band	Discharge sound but higher inlet noise[1]
Suggested source attenuation	Add a discharge plenum	Avoid using inlet vanes; use discharge plenums and/or silencers	Avoid using inlet vanes; use discharge plenums and/or silencers	Add a discharge plenum or outlet/inlet silencer
Direct upstream space required in draw-thru arrangements	None	None	None	Medium module
Direct downstream space required in blow-thru arrangements	Medium blank or diffuser module	Medium blank or diffuser module	Medium blank or diffuser module	Medium blank module
When to use?	Low-pressure applications	High-pressure applications	High-pressure applications	Multiple-duct arrangement, blow-thru applications[2]
K_t loss, abrupt discharge[3]	1.8	1.0	1.0	n/a

Note: 1. Add duct takeoff losses from the plenum fan module to external static pressure; see Trane fan performance catalog CLCH-PRC008-EN for details. 2. Same as Note 1; the uniform discharge velocity of the plenum fan may eliminate the need for turns in supply-air ductwork and diffusers, suiting it for installations with limited equipment room space. 3. In draw-thru applications, fan curves assume three diameters of straight duct downstream of the fan. Refer to AMCA 201-90, Fans and Systems, for more information when this assumption is not valid.

Filters

Filter sections contain particulate filtering media that remove contaminants from the passing air stream to improve IAQ. Filter options include high-performance (MERV 11 or higher) pleated, bag, or cartridge filters. The continuous operating range of both the high-efficiency filters and the disposable prefilter is typically 0ºF to 150ºF, but can be as high as 200ºF.

Application considerations:

- Higher filter efficiencies cost more, but provide cleaner air and better system performance. National, state, and local codes may also specify filter performance.
- Operating resistance to airflow (i.e. pressure drops). Filter resistance and first cost may increase with efficiency.
- High filtration efficiencies sometimes require more space, which lowers velocity, and may enlarge the air handler footprint.
- A high degree of filtration can lower cleaning costs in the occupied space.
- Exceeding the face velocity limit of the filter increases its resistance (as well as fan energy consumption) and necessitates more frequent maintenance or replacement.
- Exercise special care to avoid moisture carryover whenever final filters are used. Never place a blow-thru final filter section directly downstream of a cooling coil without providing an intervening source of reheat (such as fan motor). Tests have shown that certain entering-coil conditions can create water vapor that *will* collect on the final filter. The only known solution for this intermittent application issue is two degrees of reheat.
- Treating filter media with an antimicrobial coating can reduce the likelihood of microbial contamination. Trane coated pleated media filters can be treated with an antimicrobial coating.
- Install bag filters with the pleats vertical to the floor of the unit.
- Provide easy access to encourage regular filter maintenance.
- High-efficiency filters and disposable prefilters may be operated near 100 percent relative humidity; however, they may not come in direct contact with water droplets.
- Keep filters dry.

Mixing Box and Economizer

Figure 45. Mixing Box

A mixing box section typically combines the incoming outdoor air with recirculated return air collected from the occupied space. It is commonly included in an air handler design to control this mixture. When equipped with an optional Traq damper, the mixing box module permits direct measurement of outdoor airflow to assure compliance with ASHRAE Standard 62.1.

Designed to measure and modulate outdoor airflow, the Traq damper assembly consists of one to six butterfly-type dampers. The bell-mouth inlet of each damper guides air uniformly through a flow-sensing ring that accurately measures total and static pressure from 100 percent of nominal airflow down to 200 fpm through the damper. The damper assembly's ventilation control module produces a 2-to-10-Vdc signal that is proportional to airflow, recalibrates itself once every 60 seconds, and automatically adjusts for temperature variations.

Application considerations:

- The Traq damper mixing box requires only one duct diameter of straight inlet duct (as much as 80 percent less than other airflow monitoring techniques).
- Connecting a Traq-damper-equipped air handler to a building automation system, such as a Tracer building management system, permits:
  - Dynamic calculation of the outdoor air needed to adequately ventilate a multispace VAV system and reset the outdoor-air setpoint accordingly to save energy.
  - Trend logs and custom reports to document compliance with ASHRAE Standard 62.1.
- An additional mixing box can be used as an economizer to provide an exhaust path for return air, allowing the main mixing box to provide natural, non-mechanical cooling when outdoor air conditions are suitable.
- Use freeze protection for coils downstream of the mixing box when incoming outdoor air is below 35ºF (see "Protect Coils from Freezing" on page 28).

Selection Procedure

1. Size the air-handling unit based on airflow through the cooling coil (see Table 10). The unique fin design of Trane coils enables cooling coil selections at velocities in excess of 625 fpm with no moisture carryover. The coil moisture carryover curves from tested data are built into the Trane Official Product Selection System (the TOPSS™ program). Use this system to select coils.
2. Choose the coil module (see Table 11). Unit size, coil type, and coil rows determine the minimum coil section size required.
3. Select a filter type and check face velocities (see Table 12). The maximum recommended face velocity for pleated media, permanent, bag, and 12-inch cartridge filters is 625 fpm; for throwaway and HEPA filters, it is 500 fpm.
4. Design the basic air-handling system. Choose all required sections, including custom modules. Contact your local Trane sales office for more information on custom modules.
5. Estimate system static pressure requirements and select a fan (see Table 13).
6. Total the overall air-handling unit dimensions and weights using Table 14.
7. Select a control system. Factory-mounted, -wired, and -tested end devices, starters, VFDs, and direct-digital, interoperable controllers are available to minimize construction cycles and job-site coordination.
8. Contact your local Trane sales office to order an air-handling system or to ask questions.

Table 10. Size the air handler based on airflow through the cooling coil

Coil Type	Unit Size	3	4	6	8	10	12
1/2-inch unit	Area ft^2	2.92	4.51	6.11	7.99	9.98	12.30
	Qty-Size	1-20 x 21	1-20 x 32.5	1-26.25 x 33.5	1-28.75 x 40	1-28.75 x 50	1-32.5 x 54.5
5/8-inch unit	Area ft^2	2.50	4.00	5.33	7.31	9.19	11.81
	Qty-Size	1-18 x 20	1-18 x 32	1-24 x 32	1-27 x 39	1-27 x 49	1-31.5 x 54
5/8-inch or 1-inch modified	Area ft^2	1.67	2.67	2.67	4.88	6.13	9.00
	Qty-Size	1-12 x 20	1-12 x 32	1-12 x 32	1-18 x 39	1-18 x 49	1-24 x 54
Coil Type	**Unit Size**	**14**	**17**	**21**	**25**	**30**	
1/2-inch unit	Area ft^2	13.65	16.81	20.81	24.97	29.90	
	Qty-Size	1-32.5 x 60.5	1-40 x 60.5	1-43.75 x 68.5	1-52.5 x 68.5	1-52.5 x 82	
5/8-inch unit	Area ft^2	13.13	15.63	19.83	24.08	28.69	
	Qty-Size	1-31.5 x 60	1-37.5 x 60	1-42 x 68	1-51 x 68	1-51 x 81	
5/8-inch or 1-inch modified	Area ft^2	10.00	12.50	15.58	17.00	20.25	
	Qty-Size	1-24 x 60	1-30 x 60	1-33 x 68	1-36 x 68	1-36 x 81	

Table 11. Size the coil section

Coil Type	Unit Size	Rows Available 3–6	8-21	25–30
1/2-inch	Small	2-4	2-4	2-4
	Medium	2-8	2-8	2-8
	Extended-medium	2-8	2-8	2-8
	Medium large	2-8	2-8	2-8
	Medium large with access	2-6	2-6	2-6
	Large	2-8	2-8	2-8
	Large horizontal with access	2-8	2-8	2-8
	Large vertical	2-8	2-8	2-8
	Large vertical with access	2-8	2-8	2-8
5/8-inch or 1-inch	Small	1 and 2	1 and 2	1 and 2
	Medium	1-4	1-4	1-4
	Extended-medium	1-8	1-8[1]	1-8[1]
	Medium large	1-10	1-10[1]	1-10[1]
	Medium large with access	1-3	1-4[2]	1-3
	Large horizontal	1-10	1-10	1-10
	Large horizontal with access	1-6	1-6[3]	1-10
	Large vertical	1-6	1-6	1-8
	Large vertical with access	1-4	1-4	1-8

Note: [1] Unit sizes 21-30 have a 6-row maximum for stacked coils. [2]Unit sizes 17-21 have a 3-row maximum for stacked coils. [3]Unit size 21 has a 4-row maximum for stacked coils.

Table 12. Select the filter type

Filter Type	Unit Size	3	4	6	8	10	12
Flat (2-in., 4-in., and 2-in/4-in high efficiency)	Area (ft^2)	3.47	5.56	6.94	7.33	9.72	13.33
	Qty–Size	1 - 20x25	2 - 20x20	2 - 20x25	1 - 24x20 1 - 24x24	2 - 20x25 1 - 16x25	6 - 16x20
Angled (2-in. or 4-in.)	Area (ft^2)	5.56	8.89	8.89	11.11	13.89	16.67
	Qty–Size	2 - 16x25	4 - 16x20	4 - 16x20	4 - 20x20	4 - 25x20	6 - 20x20
Side load bag/cartridge[1]	Area (ft^2)	3.33	5.56	6.67	8.00	8.67	12.33
	Qty–Size	1 - 20x24	2 - 20x20	2 - 24x20	4 - 24x12	2 - 24x20 1 - 24x12	3 - 20x20 2 - 12x24

Filter Type	Unit Size	14	17	21	25	30
Flat (2-in., 4-in., and 2-in/4-in high efficiency)	Area (ft^2)	14.44	18.89	21.53	27.11	30.44
	Qty–Size	4 - 16x20 2 - 16x25	4 - 20x24 2 - 20x20	3 - 25x20 1 - 25x16 3 - 16x25	6 - 20x20 2 - 20x16 3 - 12x24	6 - 20x24 2 - 20x16 3 - 12x24
Angled (2-in. or 4-in.)	Area (ft^2)	18.06	28.89	33.33	50.00	56.67
	Qty–Size	2 - 20x25 4 - 20x20	4 - 16x25 8 - 16x20	12 - 25x16	18 - 25x16	6 - 16x25 18 - 16x20
Side load bag/cartridge[1]	Area (ft^2)	13.44	18.89	22.00	26.00	28.22
	Qty–Size	2 - 20x24 1 - 20x20 2 - 12x24	4 - 20x24 2 - 20x20	3 - 24x24 3 - 20x24	6 - 20x24 3 - 12x24	8 - 20x20 3 - 12x24

Note: [1]2-inch pre-filters are the same size as those indicated for the bag and cartridge filters.

Table 13. Select a Fan

		Nominal Airflow[1]	1500	2000	3000	4000	5000	6000	7000	8500	10500	12500	15000
		Airflow @ 625 fpm[2]	2169	3475	4338	4581	6075	8331	9025	11806	13456	16944	19025
		Unit Size	**3**	**4**	**6**	**8**	**10**	**12**	**14**	**17**	**21**	**25**	**30**
FC Housed Fan	Low Pressure	Fan size/type	9-in. FC	10-in. FC	12-in. FC	12-in. FC	15-in. FC	18-in. FC	18-in. FC	20-in. FC	22-in. FC	22-in. FC	25-in. FC
		Max TSP/rpm	4/2250	4.5/2100	5/1900	5/1900	5/1600	4/1215	4/1215	4/1050	3.5/950	3.5/950	4/850
		Motor hp range (ODP)	0.75-3	0.75-5	0.75-5	1-5	1-7.5	1-7.5	1-7.5	1.5-20	2-20	3-20	3-20
		Outlet area (ft^2)	0.84	1.03	1.46	1.46	2.05	2.88	2.88	4.38	5.54	5.54	6.94
		Fan size/type	9-6-in. FC	9-in. FC	10-in. FC	10-in. FC	12-in. FC	15-in. FC	15-in. FC	18-in. FC	20-in. FC	20-in. FC	22-in. FC
		Max TSP/rpm	4.5/2250	4/2250	4.5/2100	4.5/2100	5/1900	5/1600	5/1600	4/1215	4/1050	4/1050	3.5/950
		Motor hp range (ODP)	0.75-3	0.75-3	0.75-5	1-5	1-5	1-7.5	1-7.5	1.5-7.5	2-20	3-20	3-20
		Outlet area (ft^2)	0.6	0.84	1.03	1.03	1.46	2.05	2.05	2.88	4.38	4.38	5.54
		Fan size/type	9-4-in. FC	9-6-in. FC	9-in. FC	9-in. FC	10-in. FC	12-in. FC	12-in. FC	15-in. FC	18-in. FC	18-in. FC	20-in. FC
		Max TSP/rpm	4.5/2250	4.5/2250	4/2250	4/2250	4.5/2100	5/1900	5/1900	5/1600	4/1215	4/1215	4/1050
		Motor hp range (ODP)	0.75-3	0.75-3	0.75-3	1-3	1-5	1-5	1-5	1.5-7.5	2-7.5	3-7.5	3-20
		Outlet area (ft^2)	0.49	0.6	0.84	0.84	1.03	1.46	1.46	2.05	2.88	2.88	4.38
	High pressure	Fan size/type	9-in. FC	10-in. FC	12-in. FC	12-in. FC	15-in. FC	18-in. FC	18-in. FC	20-in. FC	22-in. FC	22-in. FC	25-in. FC
		Max TSP/rpm	5/2900	6/2525	6/2115	6/2115	6/1720	6/1500	6/1500	6/1330	5.5/1200	6/1200	6/1025
		Motor hp range (ODP)	0.75-3	0.75-5	0.75-7.5	1-7.5	1-10	1-15	1-15	1.5-20	2-20	3-25	3-30
		Outlet area (ft^2)	0.84	1.03	1.46	1.46	2.05	2.88	2.88	4.38	5.54	5.54	6.94
		Fan size/type	9-6-in. FC	9-in. FC	10-in. FC	10-in. FC	12-in. FC	15-in. FC	15-in. FC	18-in. FC	20-in. FC	20-in. FC	22-in. FC
		Max TSP/rpm	6.5/2900	6/2900	6.5/2525	6.5/2525	6/2115	6/1720	6/1720	6/1500	6/1330	6/1330	6/1200
		Motor hp range (ODP)	0.75-3	0.75-5	0.75-5	1-7.5	1-10	1-10	1-10	1.5-15	2-20	3-25	3-30
		Outlet area (ft^2)	0.6	0.84	1.03	1.03	1.46	2.05	2.05	2.88	4.38	4.38	5.54
		Fan size/type	9-4-in. FC	9-6-in. FC	9-in. FC	9-in. FC	10-in. FC	12-in. FC	12-in. FC	15-in. FC	18-in. FC	18-in. FC	20-in. FC
		Max TSP/rpm	7/2900	6.5/2900	6/2900	6/2900	6.5/2525	6/2115	6/2115	6/1720	6/1500	6/1500	6/1330
		Motor hp range (ODP)	0.75-3	0.75-5	0.75-5	1-5	1-7.5	1-10	1-10	1.5-10	2-15	3-15	3-25
		Outlet area (ft^2)	0.49	0.6	0.84	0.84	1.03	1.46	1.46	2.05	2.88	2.88	4.38

Note: [1]Nominal airflow is based on 500 fpm through a nominal coil (i.e. 500xunit size 8=4000 cfm). [2]Airflow@625 fpm through the flat filter (maximum filter velocity).

Table 13. Select a Fan

		Nominal Airflow[1]	1500	2000	3000	4000	5000	6000	7000	8500	10500	12500	15000
		Airflow @ 625 fpm[2]	2169	3475	4338	4581	6075	8331	9025	11806	13456	16944	19025
		Unit Size	**3**	**4**	**6**	**8**	**10**	**12**	**14**	**17**	**21**	**25**	**30**
AF Housed Fan	Low Pressure	Fan size/type	9-in. BC	10-in. BC	12-in. AF	12-in. AF	15-in. AF	18-in. AF	18-in. AF	20-in. AF	22-in. AF	22-in. AF	25-in. AF
		Max TSP/rpm	6.5/4375	5/4070	8/3700	8/3700	7/2900	6.5/2450	6.5/2450	7/2300	6/1900	6/1900	6/1650
		Motor hp range (ODP)	0.75-3	0.75-3	0.75-7.5	1-7.5	1-10	1-10	1-10	1.5-15	2-15	3-15	3-20
		Outlet area (ft^2)	0.84	1.03	1.46	1.46	2.05	2.88	2.88	4.38	5.54	5.54	6.94
		Fan size/type		9-in. BC	10-in. BC	10-in. BC	12-in. AF	15-in. AF	15-in. AF	18-in. AF	20-in. AF	20-in. AF	22-in. AF
		Max TSP/rpm		6/4375	5.5/4070	5.5/4070	8/3700	7/2900	7/2900	6.5/2450	6.5/2300	6.5/2300	6/1900
		Motor hp range (ODP)		0.75-3	0.75-3	1-3	1-7.5	1-10	1-10	1.5-10	2-15	3-15	3-15
		Outlet area (ft^2)		0.84	1.03	1.03	1.46	2.05	2.05	2.88	4.38	4.38	5.54
		Fan size/type			9-in. BC	9-in. BC	10-in. BC	12-in. AF	12-in. AF	15-in. AF	18-in. AF	18-in. AF	20-in. AF
		Max TSP/rpm			6.5/4375	6.5/4375	5.5/4070	8/3700	8/3700	7/2900	6.5/2450	6.5/2450	6.5/2300
		Motor hp range (ODP)			0.75-3	1-3	1-3	1-7.5	1-7.5	1.5-10	2-10	3-10	3-15
		Outlet area (ft^2)			0.84	0.84	1.03	1.46	1.46	2.05	2.88	2.88	4.38
	High Pressure	Fan size/type	9-in. BC	10-in. BC	12-in. AF	12-in. AF	15-in. AF	18-in. AF	18-in. AF	20-in. AF	22-in. AF	22-in. AF	25-in. AF
		Max TSP/rpm	8/5000	8/4650	8/4350	8/4350	9/3500	7.5/3100	7.5/3100	7.5/2750	8/2500	9/2500	9/2200
		Motor hp range (ODP)	0.75-5	0.75-5	0.75-7.5	1-10	1-15	1-15	1-15	1.5-20	2-25	3-30	3-40
		Outlet area (ft^2)	0.84	1.03	1.46	1.46	2.05	2.88	2.88	4.38	5.54	5.54	6.94
		Fan size/type		9-in. BC	10-in. BC	10-in. BC	12-in. AF	15-in. AF	15-in. AF	18-in. AF	20-in. AF	20-in. AF	22-in. AF
		Max TSP/rpm		8/5000	7.5/4650	7.5/4650	9/4350	9/3500	9/3500	9/3100	9.5/2750	10/2750	9/2500
		Motor hp range (ODP)		0.75-5	0.75-5	1-5	1-10	1-15	1-15	1.5-20	2-25	3-30	3-30
		Outlet area (ft^2)		0.84	1.03	1.03	1.46	2.05	2.05	2.88	4.38	4.38	5.54
		Fan size/type			9-in. BC	9-in. BC	10-in. BC	12-in. AF	12-in. AF	15-in. AF	18-in. AF	18-in. AF	20-in. AF
		Max TSP/rpm			8/5000	8/5000	7.5/4650	9/4350	9/4350	9/3500	9.5/3100	9.5/3100	10/2750
		Motor hp range (ODP)			0.75-5	1-5	1-5	1-10	1-10	1.5-15	2-20	3-20	3-30
		Outlet area (ft^2)			0.84	0.84	1.03	1.46	1.46	2.05	2.88	2.88	4.38
Belt-Drive Plenum Fan	Low Pressure	Fan size/type		12-in. AF	16-in. AF	16-in. AF	18-in. AF	20-in. AF	22-in. AF	25-in. AF	28-in. AF	28-in. AF	32-in. AF
		Max TSP/rpm		7/4130	8/3300	8/3300	7/3000	8/2650	8/2320	7/2070	7.5/1850	7.5/1850	6.5/1600
		Motor hp range (ODP)		0.75-5	0.75-10	1-10	1-10	1-15	1-15	1.5-20	2-25	3-25	3-25
		Fan size/type			14-in. AF	14-in. AF	16-in. AF	18-in. AF	20-in. AF	22-in. AF	25-in. AF	25-in. AF	28-in. AF
		Max TSP/rpm			7.5/3670	7.5/3670	8/3300	7/3000	8/2650	6.5/2320	6.5/2070	6.5/2070	7.5/1850
		Motor hp range (ODP)			0.75-7.5	1-7.5	1-10	1-10	1-15	1.5-15	2-20	3-20	3-25
	High Pressure	Fan size/type	11-in. BC	12-in. AF	16-in. AF	16-in. AF	18-in. AF	20-in. AF	22-in. AF	25-in. AF	28-in. AF	28-in. AF	32-in. AF
		Max TSP/rpm	9/4375	7.5/4500	8/3700	8/3700	9/3300	8/2850	9.5/2650	8/2350	8.5/2100	8.5/2100	9/1800
		Motor hp range (ODP)	0.75-5	0.75-7.5	0.75-10	1-10	1-15	1-15	1-20	1.5-25	2-30	3-30	3-40
		Fan size/type	10-in. BC	11-in. BC	14-in. AF	14-in. AF	16-in. AF	18-in. AF	20-in. AF	22-in. AF	25-in. AF	25-in. AF	28-in. AF
		Max TSP/rpm	8/5200	9/4375	9/4000	9/4000	8/3700	9/3300	9.5/2850	8/2650	9/2350	9/2350	10/2100
		Motor hp range (ODP)	0.75-3	0.75-5	0.75-10	1-10	1-10	1-15	1-20	1.5-20	2-30	3-30	3-40

Note: [1]Nominal airflow is based on 500 fpm through a nominal coil (i.e. 500xunit size 8=4000 cfm). [2]Airflow@625 fpm through the flat filter (maximum filter velocity).

For specific dimensional and weight information, refer to the unit submittals. The dimensions and weights in this manual are approximate. Trane has a policy of continuous product and product data improvement and reserves the right to change design and specifications without notice.

Note: Add 0.19 inches to total unit length for each shipping split to account for gasketing.

Table 14. Section dimensions (inches) and weights (pounds) - unit sizes 3-30

Nominal airflow[1]	1500	2000	3000	4000	5000	6000	7000	8500	10,500	12,500	15,000
Airflow at 625 fpm[2]	2169	3475	4338	4881	6075	8331	9025	11,806	13,456	16,944	19,025
Unit size	**3**	**4**	**6**	**8**	**10**	**12**	**14**	**17**	**21**	**25**	**30**
Height[3] (inches)	29.00	29.00	35.25	37.75	37.75	41.50	41.50	49.00	52.75	61.50	61.50
Width (inches)	31.50	44.00	44.00	50.50	61.50	66.50	72.00	72.00	80.00	80.00	93.50
Mixing											
-with angled filters	34.00	34.00	34.00	36.00	36.00	36.00	36.00	36.00	34.00	46.00	46.00
	173.62	200.85	211.80	248.55	283.39	310.29	328.43	341.51	361.86	480.95	536.42
-without angled filters	34.00	34.00	34.00	36.00	36.00	36.00	36.00	36.00	34.00	46.00	46.00
	164.97	189.42	198.97	231.79	264.25	285.25	301.53	314.13	328.72	440.79	490.26
-with front/back Traq and top Traq dampers[4]	34.00	34.00	34.00	44.00	36.00	42.50	36.00	36.00	50.25	46.00	46.00
	219.81	273.10	282.65	344.31	376.77	422.25	438.53	451.13	588.54	700.61	816.02
-with top/bottom airfoil (or opening) and front/back Traq dampers	34.00	34.00	34.00	36.00	36.00	36.00	36.00	36.00	34.00	46.00	46.00
	205.25	248.12	261.33	313.65	350.57	388.63	407.63	426.48	509.74	629.00	718.17
-with top Traq and front/ back/bottom airfoil dampers (or opening)	34.00	34.00	34.00	44.00	36.00	42.50	36.00	36.00	50.25	46.00	56.50
	205.25	248.12	261.33	344.31	350.57	422.25	407.63	426.48	588.54	629.00	816.02
Filters											
-2-in. angled	24.50	24.50	24.50	26.50	26.50	26.50	26.50	24.50	24.50	24.50	24.50
	144.28	159.92	171.75	200.26	228.22	250.91	267.25	301.26	334.37	374.97	422.00
-4-in. angled	24.50	24.50	24.50	26.50	26.50	26.50	26.50	24.50	24.50	24.50	24.50
	143.82	159.76	171.75	200.26	228.22	250.91	267.25	301.21	335.80	374.64	422.06
-Cartridge (12-in.) or short bag (18-in.)	24.50	24.50	24.50	26.50	26.50	26.50	26.50	24.50	24.50	24.50	24.50
	116.76	142.89	151.55	179.50	204.41	228.37	242.94	240.01	262.69	290.18	322.53
-2-in. flat	14.00	14.00	14.00	14.00	14.00	14.00	14.00	14.00	14.00	14.00	14.00
	77.28	95.00	100.46	113.78	129.31	141.62	149.86	155.21	172.72	182.98	204.23
-4-in. flat	14.00	14.00	14.00	14.00	14.00	14.00	14.00	14.00	14.00	14.00	14.00
	78.16	96.29	101.75	115.29	131.17	145.66	154.26	159.62	177.64	190.36	212.93
-2-in. and 4-in. combination flat	19.00	19.00	19.00	19.00	19.00	19.00	19.00	19.00	19.00	19.00	19.00
	117.66	144.20	152.40	181.02	205.61	232.47	247.41	244.47	270.13	297.67	331.36
-Long bag (30-in.)	36.00	41.00	41.00	44.00	42.50	42.50	42.50	44.00	50.25	46.00	46.00
	154.15	208.43	220.90	260.91	287.67	323.35	342.93	367.42	446.31	528.99	585.92

Note: [1]Nominal airflow is based on 500 fpm through a nominal coil (i.e. 500 x unit size 8=4000 cfm). [2]Airflow@625 fpm through the flat filter (maximum filter velocity). [3]Height includes standard 2.5-inch integral base frame. [4]Mixing box sections are length of extra-large access for: size 4 top standard and back low-flow Traq damper; size 25 top and back standard Traq. [5]Fan section weights include the heaviest fan with the largest ODP motor available. [6]Nominal height shown. Variable plenum height is available from 0.5 to 1.5 of nominal.

Table 14. Section dimensions (inches) and weights (pounds) - unit sizes 3-30

Nominal airflow[1]	1500	2000	3000	4000	5000	6000	7000	8500	10,500	12,500	15,000
Airflow at 625 fpm[2]	2169	3475	4338	4881	6075	8331	9025	11,806	13,456	16,944	19,025
Unit size	**3**	**4**	**6**	**8**	**10**	**12**	**14**	**17**	**21**	**25**	**30**
Height[3] (inches)	29.00	29.00	35.25	37.75	37.75	41.50	41.50	49.00	52.75	61.50	61.50
Width (inches)	31.50	44.00	44.00	50.50	61.50	66.50	72.00	72.00	80.00	80.00	93.50
Access or blank											
-Small horizontal	10.00	10.00	10.00	10.00	10.00	10.00	10.00	10.00	10.00	10.00	10.00
	55.62	68.13	71.24	78.99	89.99	96.86	102.37	106.11	115.98	120.34	133.84
-Medium horizontal	14.00	14.00	14.00	14.00	14.00	14.00	14.00	14.00	14.00	14.00	14.00
	69.51	84.86	88.92	98.53	112.03	120.61	127.36	132.24	144.50	150.19	166.77
-Extended-medium horizontal	19.00	19.00	19.00	19.00	19.00	19.00	19.00	19.00	19.00	19.00	19.00
	86.87	105.77	111.02	122.95	139.58	150.29	158.61	164.91	180.16	187.51	207.92
-Medium-large horizontal	24.50	24.50	24.50	26.50	26.50	26.50	26.50	24.50	24.50	24.50	24.50
	126.24	145.90	153.20	181.11	206.77	223.33	236.22	231.80	254.42	265.49	296.11
-Large horizontal or turning	34.00	34.00	34.00	36.00	36.00	36.00	36.00	36.00	34.00	46.00	46.00
	164.97	189.42	198.97	231.79	264.25	285.25	301.53	314.13	328.72	440.79	490.26
-Extra-large horizontal or turning	36.00	41.00	41.00	44.00	42.50	42.50	42.50	44.00	50.25	56.50	56.50
	173.12	221.48	232.69	274.47	303.57	327.61	346.21	371.40	455.81	526.39	585.08
Coil											
-Small horizontal (with 4-row UW)	10.00	10.00	10.00	10.00	10.00	10.00	10.00	10.00	10.00	10.00	10.00
	129.58	168.09	196.08	231.59	275.71	318.20	343.45	393.46	478.25	545.60	622.23
-Medium horizontal (with 8-row UW)	14.00	14.00	14.00	14.00	14.00	14.00	14.00	14.00	14.00	14.00	14.00
	265.88	351.17	414.51	517.99	619.47	725.47	811.67	914.77	1125.98	1300.03	1512.45
-Extended-medium horizontal (with 8-row UW)	19.00	19.00	19.00	19.00	19.00	19.00	19.00	19.00	19.00	19.00	19.00
	86.87	105.77	111.02	122.95	139.58	150.29	158.61	164.91	180.16	187.51	207.92
-Medium-large horizontal (with 10-row W)	24.50	24.50	24.50	26.50	26.50	26.50	26.50	24.50	24.50	24.50	24.50
	265.88	351.17	414.51	517.99	619.47	725.47	811.67	914.77	1125.98	1300.03	1512.45
-Large horizontal or vertical (with 10-row W)	34.00	34.00	34.00	36.00	36.00	36.00	36.00	36.00	34.00	46.00	46.00
	302.40	394.44	460.04	567.93	675.35	785.40	876.58	996.69	1204.85	1489.95	1721.50
Fan[5]											
Length	36.00	41.00	41.00	44.00	42.50	42.50	42.50	44.00	50.25	56.50	56.50
-Belt-Drive Plenum Fan	374.50	511.79	600.33	655.50	843.70	918.48	1011.41	1199.24	1452.29	1542.01	1800.32
-FC Fans	349.30	441.17	531.83	582.15	729.43	889.08	914.75	1032.55	1319.90	1505.12	1731.00
-AF/BC Fans	356.40	458.77	562.23	643.55	857.46	927.01	952.67	1076.13	1468.62	1602.85	1878.37
Diffuser	10.00	10.00	10.00	14.00	14.00	14.00	14.00	14.00	14.00	19.00	19.00
	53.27	65.78	68.89	96.18	109.68	118.26	125.01	129.89	142.15	185.16	205.57
Discharge plenum											
-Horizontal	34.00	34.00	34.00	36.00	36.00	36.00	36.00	36.00	34.00	46.00	46.00
	162.62	187.07	196.62	229.44	261.90	282.90	299.18	311.78	326.37	438.44	487.91
-Vertical[6]	36.00	41.00	41.00	44.00	42.50	42.50	42.50	44.00	50.25	56.50	56.50
	188.64	207.97	218.27	255.25	292.89	316.92	335.85	349.93	367.96	490.22	548.02

Note: [1]Nominal airflow is based on 500 fpm through a nominal coil (i.e. 500xunit size 8=4000 cfm). [2]Airflow@625 fpm through the flat filter (maximum filter velocity). [3]Height includes standard 2.5-inch integral base frame. [4]Mixing box sections are length of extra-large access for: size 4 top standard and back low-flow Traq damper; size 25 top and back standard Traq. [5]Fan section weights include the heaviest fan with the largest ODP motor available.[6]Nominal height shown. Variable plenum height is available from 0.5 to 1.5 of nominal.

General Data

This section includes summary information per unit size, including section dimensions and weights, coil availability, filter areas and sizes, fan section weights and application data, and damper areas.

Note: For specific dimensional and weight information, refer to the unit submittals. The dimensions and weights in this manual are approximate. Trane has a policy of continuous product and product data improvement and reserves the right to change design and specifications without notice.

Unit Size 3

Table 15. Dimensions (inches) and weights (pounds) for unit size 3

Section type	Length	Weight
Mixing		
-with angled filters	34.00	173.626
-without angled filters	34.00	164.97
-with front/back Traq and top Traq dampers	34.00	219.81
-with top/bottom airfoil (or opening) and front/back Traq dampers	34.00	205.25
-with top Traq and front/back/bottom airfoil dampers (or opening)	34.00	205.25
Filters		
-2-in. angled	24.50	144.28
-4-in. angled	24.50	143.82
-Cartridge (12-in.) or short bag (18-in.)	24.50	116.76
-2-in. flat	14.00	77.28
-4-in. flat	14.00	78.16
-2-in. and 4-in. combination flat	19.00	117.66
-Long bag (30-in.)	36.00	154.15
Access or blank		
-Small horizontal	10.00	55.62
-Medium horizontal	14.00	69.51
-Extended-medium horizontal	19.00	86.87
-Medium-large horizontal	24.50	126.24
-Large horizontal or turning	34.00	164.97
-Extra-large horizontal or turning	36.00	173.12
Coil[1]		
-Small horizontal (with 4-row UW)	10.00	129.58
-Medium horizontal (with 8-row UW)	14.00	265.88
-Extended-medium horizontal (with 8-row UW)	19.00	86.87
-Medium-large horizontal (with 10-row W)	24.50	265.88
-Large horizontal or vertical (with 10-row W)	34.00	302.40
Fan[2]		
-Belt-drive Plenum Fans	36.00	374.50
-FC Fans	36.00	349.30
-AF/BC Fans	36.00	356.40
Diffuser	10.00	53.27
Discharge plenum		
-Horizontal	34.00	162.62
-Vertical[3]	36.00	188.64

Note: [1]Coil section weights include the coil noted with 144 aluminum fins per foot, standard tubes, and no water. Refer to the coil selection for exact coil weights.[2]Fan section weights include the heaviest fan with the largest ODP motor available.[3]Nominal height shown. Variable plenum height is available from 0.5 to 1.5 of nominal.

Table 16. Coil availability - unit size 3

Section Type	1/2-inch Coils	5/8-inch Coils
Small	2-4 rows	1 and 2 rows
Medium	2–8 rows	1–4 rows
Extended-medium	2–8 rows	1–8 rows
Medium-large	2-8 rows	1-10 rows
-with access	2–6 rows	1–3 rows
Large horizontal	2–8 rows	1–10 rows
-with access	2–8 rows	1–6 rows
Large vertical	2-8 rows	1–6 rows
-with access	2–8 rows	1–4 rows

Table 17. Coil data for unit size 3

Coil Type	Rows	Fin Type	Area (ft²)	Qty–Size (in.)
1/2-inch unit coils (UW,UA, UF)	2 to 8	Aluminum	2.92	1–20×21
5/8-inch unit coils				
-W, 5W, 5A, P2, P4, P8, D1, TT	All available rows	Aluminum or Copper	2.50	1–18×20
-WD, D2	6 to 10	Aluminum or Copper	2.38	1–18×19
1-inch unit coil (NS)	1	Aluminum or Copper	2.50	1–18×20
1/2-inch modified coil (WL)	2 to 8	Aluminum	1.74	1–12×20
5/8-inch modified coils				
-W, 5W, 5A, P2, P4, D1, TT	All available rows	Aluminum or Copper	1.67	1–12×20
1-inch modified coil (NS)	1	Aluminum or Copper	1.67	1–12×20

Table 18. Filter data for unit size 3

Filter Type	Area (ft²)	Qty–Size (in.)
Flat (2-in., 4-in., and 2-in/4-in high efficiency) pleated, permanent, throwaway media	3.47	1 - 20x25
Angled (2-in. or 4-in.) Pleated, permanent, throwaway media	5.56	2 - 16x25
Side load bag or cartridge	3.33	1 - 20x24

Note: 2-inch filters available in permanent, throwaway, or pleated media; 4-inch filters available in pleated media, 65%, 85%, or 95% efficiency; Bag or cartridge filters available in 65%, 85%, or 95% efficiency.

Table 19. Damper areas for unit size 3

Type	A (in)	B (in)	Area (ft^2)
Rectangular damper	13.25	13.97	1.29

Type	Dia (in)	Qty	Area (ft^2)
Traq damper	13	1	0.92

Table 20. Fan data for unit size 3

Size/type	Housed Fans								Belt-drive Plenum Fans	
	Low Pressure				High Pressure				High Pressure	
	9-in FC	9-6-in FC	9-4-in FC	9-in BC	9-in FC	9-6-in FC	9-4-in FC	9-in BC	11-in BC	10-in BC
Fan name	**9FA**	**5FA**	**4FA**	**9BA**	**9FB**	**5FB**	**4FB**	**9BB**	**11PB**	**10PB**
Max rpm	2250	2250	2250	4375	2900	2900	2900	5000	4735	5200
ODP NEMA Prem motor hp range	0.75-3	0.75-3	0.75-3	0.75-3	0.75-3	0.75-3	0.75-3	0.75-5	0.75-5	0.75-3
Outlet area (ft²)	0.84	0.60	0.49	0.84	0.84	0.60	0.49	0.84	n/a	n/a
Bearing size (in.)	0.75	0.75	0.75	0.75	0.75	0.75	0.75	0.75	0.75	0.75
Shaft size (in.)	0.75	0.75	0.75	0.75	0.75	0.75	0.75	0.75	0.75	0.75

Unit Size 4

Table 21. Dimensions (inches) and Weights (pounds) for Unit Size 4

Section type	Length (in.)	Weight (lb.)
Mixing[1]		
-with angled filters	34.00	200.85
-without angled filters	34.00	189.42
-with front/back Traq and top Traq dampers	34.00	273.10
-with top/bottom airfoil (or opening) and front/back Traq dampers	34.00	248.12
-with top Traq and front/back/bottom airfoil dampers (or opening)	34.00	248.12
Filters		
-2-in. angled	24.50	159.92
-4-in. angled	24.50	159.76
-Cartridge (12-in.) or short bag (18-in.)	24.50	142.89
-2-in. flat	14.00	95.00
-4-in. flat	14.00	96.29
-2-in. and 4-in. combination flat	19.00	144.20
-Long bag (30-in.)	41.00	208.43
Access or blank		
-Small horizontal	10.00	68.13
-Medium horizontal	14.00	84.86
-Extended-medium horizontal	19.00	105.77
-Medium-large horizontal	24.50	145.90
-Large horizontal or turning	34.00	189.42
-Extra-large horizontal or turning	41.00	221.48
Coil[2]		
-Small horizontal (with 4-row UW)	10.00	168.09
-Medium horizontal (with 8-row UW)	14.00	351.17
-Extended-medium horizontal (with 8-row UW)	19.00	105.77
-Medium-large horizontal (with 10-row W)	24.50	351.17
-Large horizontal or vertical (with 10-row W)	34.00	394.44
Fan[3]		
-Belt-drive Plenum Fans	41.00	511.79
-FC Fans	41.00	441.17
-AF/BC Fans	41.00	458.77
Diffuser	10.00	65.78
Discharge plenum		
-Horizontal	34.00	187.07
-Vertical[4]	41.00	207.97

Note: [1]Mixing box section is length of extra-large access for size 4 top standard and back low-flow Traq damper. [2]Coil section weights include the coil noted with 144 aluminum fins per foot, standard tubes, and no water. Refer to the coil selection for exact coil weights. [3]Fan section weights include the heaviest fan with the largest ODP motor available. [4]Nominal height shown. Variable plenum height is available from 0.5 to 1.5 of nominal.

Table 22. Coil availability - unit size 4

Section Type	1/2-inch Coils	5/8-inch Coils
Small	2-4 rows	1 and 2 rows
Medium	2–8 rows	1–4 rows
Extended-medium	2–8 rows	1–8 rows
Medium-large	2-8 rows	1-10 rows
-with access	2–6 rows	1–3 rows
Large horizontal	2–8 rows	1–10 rows
-with access	2–8 rows	1–6 rows
Large vertical	2-8 rows	1–6 rows
-with access	2–8 rows	1–4 rows

Table 23. Coil data for unit size 4

Coil Type	Rows	Fin Type	Area (ft²)	Qty–Size (in.)
1/2-inch unit coils (UW,UA, UF)	2 to 8	Aluminum	4.51	1–20×32.50
5/8-inch unit coils				
-W, 5W, 5A, P2, P4, D1, TT, NS	All available rows	Aluminum or Copper	4.00	1–18×32
-WD, D2	6 to 10	Aluminum or Copper	3.88	1–18×31
1-inch unit coil (NS)	1	Aluminum or Copper	4.00	1–18×32
1/2-inch modified coil (WL)	2 to 8	Aluminum	2.78	1–12×32
5/8-inch modified coils				
-W, 5W, 5A, P2, P4, D1, TT	All available rows	Aluminum or Copper	2.67	1–12×32
1-inch modified coil (NS)	1	Aluminum or Copper	2.67	1–12×32

Table 24. Filter data for unit size 4

Filter Type	Area (ft²)	Qty–Size (in.)
Flat (2-in., 4-in., and 2-in/4-in high efficiency) pleated, permanent, throwaway media	5.56	2 - 20x20
Angled (2-in. or 4-in.) Pleated, permanent, throwaway media	8.89	4 - 16x20
Side load bag or cartridge	5.56	2 - 20x20

Note: 2-inch filters available in permanent, throwaway, or pleated media; 4-inch filters available in pleated media, 65%, 85%, or 95% efficiency; Bag or cartridge filters available in 65%, 85%, or 95% efficiency.

Table 25. Damper areas for unit size 4

Type	A (in)	B (in)	Area (ft^2)
Rectangular damper	19.25	13.97	1.87

Type	Dia (in)	Qty	Area (ft^2)
Traq damper	13	2	1.84

Table 26. Fan data for unit size 4

Size/type	Housed Fans										Belt-drive Plenum Fans		
	Low Pressure					High Pressure					Low Pressure	High Pressure	
	10-in. FC	9-in. FC	9-6-in. FC	10-in. BC	9-in. BC	10-in. FC	9-in. FC	9-6 in. FC	10-in. BC	9-in. BC	12-in. AF	12-in. AF	11-in. BC
Fan name	**10FA**	**9FA**	**5FA**	**10BA**	**9BA**	**10FB**	**9FB**	**5FB**	**10BB**	**9BB**	**12PA**	**12PB**	**11PB**
Max rpm	2100	2250	2250	4070	4375	2525	2900	2900	4650	5000	4130	4500	4735
ODP NEMA Premium motor hp range	0.75-5	0.75-3	0.75-3	0.75-3	0.75-3	0.75-5	0.75-5	0.75-5	0.75-5	0.75-5	0.75-5	0.75-7.5	0.75-5
Outlet area (ft²)	1.03	0.84	0.60	1.03	0.84	1.03	0.84	0.60	1.03	0.84	n/a	n/a	n/a
Bearing size (in.)	0.75	0.75	0.75	0.75	0.75	0.75	0.75	0.75	0.75	0.75	1	1.19	0.75
Shaft size (in.)	0.75	0.75	0.75	0.75	0.75	0.75	0.75	0.75	0.75	0.75	1	1.19	0.75

Unit Size 6

Table 27. Dimensions (inches) and Weights (pounds) for Unit Size 6

Section type	Length (in.)	Weight (lb.)
Mixing		
-with angled filters	34.00	211.80
-without angled filters	34.00	198.97
-with front/back Traq and top Traq dampers	34.00	282.65
-with top/bottom airfoil (or opening) and front/back Traq dampers	34.00	261.33
-with top Traq and front/back/bottom airfoil dampers (or opening)	34.00	261.33
Filters		
-2-in. angled	24.50	171.75
-4-in. angled	24.50	171.75
-Cartridge (12-in.) or short bag (18-in.)	24.50	151.55
-2-in. flat	14.00	100.46
-4-in. flat	14.00	101.75
-2-in. and 4-in. combination flat	19.00	152.40
-Long bag (30-in.)	41.00	220.90
Access or blank		
-Small horizontal	10.00	71.24
-Medium horizontal	14.00	88.92
-Extended-medium horizontal	19.00	111.02
-Medium-large horizontal	24.50	153.20
-Large horizontal or turning	34.00	198.97
-Extra-large horizontal or turning	41.00	232.69
Coil[1]		
-Small horizontal (with 4-row UW)	10.00	196.08
-Medium horizontal (with 8-row UW)	14.00	414.51
-Extended-medium horizontal (with 8-row UW)	19.00	111.02
-Medium-large horizontal (with 10-row W)	24.50	414.51
-Large horizontal or vertical (with 10-row W)	34.00	460.04
Fan[2]		
-Belt-drive Plenum Fans	41.00	600.33
-FC Fans	41.00	531.83
-AF/BC Fans	41.00	562.23
Diffuser	10.00	68.89
Discharge plenum		
-Horizontal	34.00	196.62
-Vertical[3]	41.00	218.27

Note: [1]Coil section weights include the coil noted with 144 aluminum fins per foot, standard tubes, and no water. Refer to the coil selection for exact coil weights.[2]Fan section weights include the heaviest fan with the largest ODP motor available.[3]Nominal height shown. Variable plenum height is available from 0.5 to 1.5 of nominal.

Table 28. Coil availability - unit size 6

Section Type	1/2-inch Coils	5/8-inch Coils
Small	2-4 rows	1 and 2 rows
Medium	2–8 rows	1–4 rows
Extended-medium	2–8 rows	1–8 rows
Medium-large	2-8 rows	1-10 row
-with access	2–6 rows	1–3 rows
Large horizontal	2–8 rows	1–10 rows
-with access	2–8 rows	1–6 rows
Large vertical	2-8 rows	1–6 rows
-with access	2–8 rows	1–4 rows

Table 29. Coil data for unit size 6

Coil Type	Rows	Fin Type	Area (ft²)	Qty–Size (in.)
1/2-inch unit coils (UW,UA, UF)	2 to 8	Aluminum	6.11	1–26.25x33.50
5/8-inch unit coils				
-W, 5W, 5A, P2, P4, D1, TT, NS	All available rows	Aluminum or Copper	5.33	1–24×32
-WD, D2	6 to 10	Aluminum or Copper	5.17	1–24×31
1-inch unit coil (NS)	1	Aluminum or Copper	5.33	1–24×32
1/2-inch modified coil (WL)	2 to 8	Aluminum	2.78	1–12×32
5/8-inch modified coils				
-W, 5W, 5A, P2, P4, D1, TT	All available rows	Aluminum or Copper	2.67	1–12×32
1-inch modified coil (NS)	1	Aluminum or Copper	2.67	1–12×32

Table 30. Filter data for unit size 6

Filter Type	Area (ft²)	Qty–Size (in.)
Flat (2-in., 4-in., and 2-in/4-in high efficiency) pleated, permanent, throwaway media	5.56	2 - 20x25
Angled (2-in. or 4-in.) Pleated, permanent, throwaway media	8.89	4 - 16x20
Side load bag or cartridge	6.67	2 - 24x20

Note: 2-inch filters available in permanent, throwaway, or pleated media; 4-inch filters available in pleated media, 65%, 85%, or 95% efficiency; Bag or cartridge filters available in 65%, 85%, or 95% efficiency.

Table 31. Damper areas for unit size 6

Type	A (in)	B (in)	Area (ft²)
Rectangular damper	25.25	13.97	2.45

Type	Dia (in)	Qty	Area (ft²)
Traq damper	13	2	1.84

Table 32. Fan data for unit size 6

Size/Type	Housed Fans												Belt-drive Plenum Fans			
	Low Pressure						High Pressure						Low Pressure		High Pressure	
	12-in. FC	10-in. FC	9-in. FC	12-in. AF	10-in. BC	9-in. BC	12-in. FC	10-in. FC	9-in. FC	12-in. AF	10-in. BC	9-in. BC	16-in. AF	14-in. AF	16-in. AF	14-in. AF
Fan name	**12FA**	**10FA**	**9FA**	**12AA**	**10BA**	**9BA**	**12FB**	**10FB**	**9FB**	**12AB**	**10BB**	**9BB**	**16PA**	**14PA**	**16PB**	**14PB**
Max rpm	1900	2100	2250	3700	4070	4375	2115	2525	2900	4350	4650	5000	3300	3670	3700	4000
ODP NEMA Premium motor hp range	0.75-5	0.75-5	0.75-3	0.75-7.5	0.75-3	0.75-3	0.75-7.5	0.75-7.5	0.75-5	0.75-7.5	0.75-5	0.75-5	0.75-10	0.75-7.5	0.75-10	0.75-10
Outlet area (ft²)	1.46	1.03	0.84	1.46	1.03	0.84	1.46	1.03	0.84	1.46	1.03	0.84	n/a	n/a	n/a	n/a
Bearing size (in.)	1	0.75	0.75	1	0.75	0.75	1.1875	0.75	0.75	1.4375	0.75	0.75	1.1875	1	1.375	1.1875
Shaft size (in.)	1	0.75	0.75	1	0.75	0.75	1.1875	0.75	0.75	1.4375	0.75	0.75	1.1875	1	1.375	1.1875

Unit Size 8

Table 33. Dimensions (inches) and Weights (pounds) for Unit Size 8

Section type	Length	Weight
Mixing		
-with angled filters	36.00	248.55
-without angled filters	36.00	231.79
-with front/back Traq and top Traq dampers	44.00	344.31
-with top/bottom airfoil (or opening) and front/back Traq dampers	36.00	313.65
-with top Traq and front/back/bottom airfoil dampers (or opening)	44.00	344.31
Filters		
-2-in. angled	26.50	200.26
-4-in. angled	26.50	200.26
-Cartridge (12-in.) or short bag (18-in.)	26.50	179.50
-2-in. flat	14.00	113.78
-4-in. flat	14.00	115.29
-2-in. and 4-in. combination flat	19.00	181.02
-Long bag (30-in.)	44.00	260.91
Access or blank		
-Small horizontal	10.00	78.99
-Medium horizontal	14.00	98.53
-Extended-medium horizontal	19.00	122.95
-Medium-large horizontal	26.50	181.11
-Large horizontal or turning	36.00	231.79
-Extra-large horizontal or turning	44.00	274.47
Coil[1]		
-Small horizontal (with 4-row UW)	10.00	231.59
-Medium horizontal (with 8-row UW)	14.00	517.99
-Extended-medium horizontal (with 8-row UW)	19.00	122.95
-Medium-large horizontal (with 10-row W)	26.50	517.99
-Large horizontal or vertical (with 10-row W)	36.00	567.93
Fan[2]		
-Belt-drive Plenum Fans	44.00	655.50
-FC Fans	44.00	582.15
-AF/BC Fans	44.00	643.55
Diffuser	14.00	96.18
Discharge plenum		
-Horizontal	36.00	229.44
-Vertical[3]	44.00	255.25

Note: [1]Coil section weights include the coil noted with 144 aluminum fins per foot, standard tubes, and no water. Refer to the coil selection for exact coil weights.[2]Fan section weights include the heaviest fan with the largest ODP motor available.[3]Nominal height shown. Variable plenum height is available from 0.5 to 1.5 of nominal.

Table 34. Coil availability - unit size 8

Section Type	1/2-inch Coils	5/8-inch Coils
Small	2-4 rows	1 and 2 rows
Medium	2–8 rows	1–4 rows
Extended-medium	2–8 rows	1–8 rows
Medium-large	2-8 rows	1-10 rows
-with access	2–6 rows	1–4 rows
Large horizontal	2–8 rows	1–10 rows
-with access	2–8 rows	1–6 rows
Large vertical	2-8 rows	1–6 rows
-with access	2–8 rows	1–4 rows

Table 35. Coil data for unit size 8

Coil Type	Rows	Fin Type	Area (ft²)	Qty–Size (in.)
1/2-inch unit coils (UW,UA, UF)	2 to 8	Aluminum	7.99	1–28.75×40
5/8-inch unit coils				
-W, 5W, D1	All available rows	Aluminum or Copper	7.31	1–27×39
-WD, D2	6 to 10	Aluminum or Copper	7.13	1–27×38
-5A, P2, P4, P8, TT	All available rows	Aluminum or Copper	6.50	1–24×39
1-inch unit coil (NS)	1	Aluminum or Copper	6.50	1–24×39
1/2-inch modified coils (WL, LL, FD)	All available rows	Aluminum	4.95	1–18×38
5/8-inch modified coils				
-W, 5W, 5A, P2, P4, D1, TT	All available rows	Aluminum or Copper	4.88	1–18×39
-WD, D2	6 to 10	Aluminum or Copper	4.75	1–18×38
1-inch modified coil (NS)	1	Aluminum or Copper	4.88	1–18×39

Table 36. Filter data for unit size 8

Filter Type	Area (ft²)	Qty–Size (in.)
Flat (2-in., 4-in., and 2-in/4-in high efficiency) pleated, permanent, throwaway media	7.33	1 - 24x20 1 - 24x24
Angled (2-in. or 4-in.) Pleated, permanent, throwaway media	11.11	4 - 20x20
Side load bag or cartridge	8.00	4 - 24x12

Note: 2-inch filters available in permanent, throwaway, or pleated media; 4-inch filters available in pleated media, 65%, 85%, or 95% efficiency; Bag or cartridge filters available in 65%, 85%, or 95% efficiency

Table 37. Damper areas for unit size 8

Type	A (in)	B (in)	Area (ft^2)
Rectangular damper	34.25	13.97	3.32

Type	Dia (in)	Qty	Area (ft^2)
Traq damper	13	3	2.76

Table 38. Fan data for unit size 8

Size/Type	Housed Fans												Belt-drive Plenum Fans			
	Low Pressure						High Pressure						Low Pressure		High Pressure	
	12-in. FC	10-in. FC	9-in. FC	12n. AF	10-in. BC	9-in. BC	12-in. FC	10-in. FC	9-in. FC	12-in. AF	10-in. BC	9-in. BC	16-in. AF	14-in. AF	16-in. AF	14-in. AF
Fan name	**12FA**	**10FA**	**9FA**	**12AA**	**10BA**	**9BA**	**12FB**	**10FB**	**9FB**	**12AB**	**10BB**	**9BB**	**16PA**	**14PA**	**16PB**	**14PB**
Max rpm	1900	2100	2250	3700	4070	4375	2115	2525	2900	4350	4650	5000	3300	3670	3700	4000
ODP NEMA Premium motor hp range	1-5	1-5	1-3	1-7.5	1-3	1-3	1-7.5	1-7.5	1-5	1-10	1-5	1-5	1-10	1-7.5	1-10	1-10
Outlet area (ft²)	1.46	1.03	0.84	1.46	1.03	0.84	1.46	1.03	0.84	1.46	1.03	0.84	n/a	n/a	n/a	n/a
Bearing size (in.)	1	0.75	0.75	1	0.75	0.75	1.1875	0.75	0.75	1.4375	0.75	0.75	1.1875	1	1.375	1.1875
Shaft size (in.)	1	0.75	0.75	1	0.75	0.75	1.1875	0.75	0.75	1.4375	0.75	0.75	1.1875	1	1.375	1.1875

Unit Size 10

Table 39. Dimensions (inches) and Weights (pounds) for Unit Size 10

Section type	Length	Weight
Mixing		
-with angled filters	36.00	283.39
-without angled filters	36.00	264.25
-with front/back Traq and top Traq dampers	42.50	376.77
-with top/bottom airfoil (or opening) and front/back Traq dampers	36.00	350.57
-with top Traq and front/back/bottom airfoil dampers (or opening)	36.00	350.57
Filters		
-2-in. angled	26.50	228.22
-4-in. angled	26.50	228.22
-Cartridge (12-in.) or short bag (18-in.)	26.50	204.41
-2-in. flat	14.00	129.31
-4-in. flat	14.00	131.17
-2-in. and 4-in. combination flat	19.00	205.61
-Long bag (30-in.)	42.50	287.67
Access or blank		
-Small horizontal	10.00	89.99
-Medium horizontal	14.00	112.03
-Extended-medium horizontal	19.00	139.58
-Medium-large horizontal	26.50	206.77
-Large horizontal or turning	36.00	264.25
-Extra-large horizontal or turning	42.50	303.57
Coil[1]		
-Small horizontal (with 4-row UW)	10.00	275.71
-Medium horizontal (with 8-row UW)	14.00	619.47
-Extended-medium horizontal (with 8-row UW)	19.00	139.58
-Medium-large horizontal (with 10-row W)	26.50	619.47
-Large horizontal or vertical (with 10-row W)	36.00	675.35
Fan[2]		
-Belt-drive Plenum Fans	42.50	843.70
-FC Fans	42.50	729.43
-AF Fans	42.50	857.46
Diffuser	14.00	109.68
Discharge plenum		
-Horizontal	36.00	261.90
-Vertical[3]	42.50	292.89

Note: [1]Coil section weights include the coil noted with 144 aluminum fins per foot, standard tubes, and no water. Refer to the coil selection for exact coil weights.[2]Fan section weights include the heaviest fan with the largest ODP motor available.[3]Nominal height shown. Variable plenum height is available from 0.5 to 1.5 of nominal.

Table 40. Coil availability-size 10

Section Type	1/2-inch Coils	5/8-inch Coils
Small	2-4 rows	1 and 2 rows
Medium	2–8 rows	1–4 rows
Extended-medium	2–8 rows	1–8 rows
Medium-large	2-8 rows	1-10 rows
-with access	2–6 rows	1–4 rows
Large horizontal	2–8 rows	1–10 rows
-with access	2–8 rows	1–6 rows
Large vertical	2-8 rows	1–6 rows
-with access	2–8 rows	1–4 rows

Table 41. Coil data for unit size 10

Coil Type	Rows	Fin Type	Area (ft²)	Qty–Size (in.)
1/2-inch unit coils (UW,UA, UF)	2 to 8	Aluminum	9.98	1–28.75×50
5/8-inch unit coils				
-W, 5W, D1	All available rows	Aluminum or Copper	9.19	1-27x49
-WD, D2	6 to 10	Aluminum or Copper	9.19	1-27x49
-5A, P2, P4, P8, TT	All available rows	Aluminum or Copper	8.17	1-24x49
1-inch unit coil (NS)	1	Aluminum or Copper	8.17	1–24×49
1/2-inch modified coils (WL, LL, FD)	All available rows	Aluminum	6.38	1–18×49
5/8-inch modified coils -W, WD, 5W, 5A, P2, P4, D1, D2, TT	All available rows	Aluminum or Copper	6.13	1–18×49
1-inch modified coil (NS)	1	Aluminum or Copper	6.13	1–18×49

Table 42. Filter data for unit size 10

Filter Type	Area (ft²)	Qty–Size (in.)
Flat (2-in., 4-in., and 2-in/4-in high efficiency) pleated, permanent, throwaway media	9.72	2 - 20x25 1 - 16x25
Angled (2-in. or 4-in.) Pleated, permanent, throwaway media	13.89	4 - 25x20
Side load bag or cartridge	8.67	2 - 24x20 1 - 24x12

Note: 2-inch filters available in permanent, throwaway, or pleated media; 4-inch filters available in pleated media, 65%, 85%, or 95% efficiency; Bag or cartridge filters available in 65%, 85%, or 95% efficiency.

Table 43. Damper areas for unit size 10

Type	A (in)	B (in)	Area (ft^2)
Rectangular damper	42.75	13.97	4.15

Type	Dia (in)	Qty	Area (ft^2)
Traq damper	13	3	2.76

Table 44. Fan data for unit size 10

Size/type	Housed Fans												Belt-drive Plenum Fans			
	Low Pressure						High Pressure						Low Pressure		High Pressure	
	15-in. FC	12-in. FC	10-in. FC	15-in. AF	12-in. AF	10-in. BC	15-in. FC	12-in. FC	10-in. FC	15-in. AF	12-in. AF	10-in. BC	18-in. AF	16-in. AF	18-in. AF	16-in. AF
Fan name	**15FA**	**12FA**	**10FA**	**15AA**	**12AA**	**10BA**	**15FB**	**12FB**	**10FB**	**15AB**	**12AB**	**10BB**	**18PA**	**16PA**	**18PB**	**16PB**
Max rpm	1600	1900	2100	2900	3700	4070	1720	2115	2525	3500	4350	4650	3000	3300	3300	3700
ODP NEMA Premium motor hp range	1-7.5	1-5	1-5	1-10	1-7.5	1-3	1-10	1-10	1-7.5	1-15	1-10	1-5	1-10	1-10	1-15	1-10
Outlet area (ft²)	2.05	1.46	1.03	2.05	1.46	1.03	2.05	1.46	1.03	2.05	1.46	1.03	n/a	n/a	n/a	n/a
Bearing size (in.)	1	1	0.75	1.1875	1	0.75	1.1875	1.1875	0.75	1.4375	1.4375	1	1.1875	1.1875	1.5	1.375
Shaft size (in.)	1	1	0.75	1.1875	1	0.75	1.1875	1.1875	0.75	1.4375	1.4375	1	1.1875	1.1875	1.5	1.375

Unit Size 12

Table 45. Dimensions (inches) and Weights (pounds) for Unit Size 12

Section type	Length	Weight
Mixing		
-with angled filters	36.00	310.29
-without angled filters	36.00	285.25
-with front/back Traq and top Traq dampers	36.00	422.25
-with top/bottom airfoil (or opening) and front/back Traq dampers	36.00	388.63
-with top Traq and front/back/bottom airfoil dampers (or opening)	42.50	422.25
Filters		
-2-in. angled	26.50	250.91
-4-in. angled	26.50	250.91
-Cartridge (12-in.) or short bag (18-in.)	26.50	228.37
-2-in. flat	14.00	141.62
-4-in. flat	14.00	145.66
-2-in. and 4-in. combination flat	19.00	232.47
-Long bag (30-in.)	42.50	323.35
Access or blank		
-Small horizontal	10.00	96.86
-Medium horizontal	14.00	120.61
-Extended-medium horizontal	19.00	150.29
-Medium-large horizontal	26.50	223.33
-Large horizontal or turning	36.00	285.25
-Extra-large horizontal or turning	42.50	327.61
Coil[1]		
-Small horizontal (with 4-row UW)	10.00	318.20
-Medium horizontal (with 8-row UW)	14.00	725.47
-Extended-medium horizontal (with 8-row UW)	19.00	150.29
-Medium-large horizontal (with 10-row W)	26.50	725.47
-Large horizontal or vertical (with 10-row W)	36.00	785.40
Fan[2]		
-Belt-drive Plenum Fans	42.50	918.48
-FC Fans	42.50	889.08
-AF Fans	42.50	927.01
Diffuser	14.00	118.26
Discharge plenum		
-Horizontal	36.00	282.90
-Vertical[3]	42.50	316.92

Note: [1]Coil section weights include the coil noted with 144 aluminum fins per foot, standard tubes, and no water. Refer to the coil selection for exact coil weights.[2]Fan section weights include the heaviest fan with the largest ODP motor available.[3]Nominal height shown. Variable plenum height is available from 0.5 to 1.5 of nominal.

Table 46. Coil availability - size 12

Section Type	1/2-inch Coils	5/8-inch Coils
Small	2-4 rows	1 and 2 rows
Medium	2–8 rows	1–4 rows
Extended-medium	2–8 rows	1–8 rows
Medium-large	2-8 rows	1-10 rows
-with access	2–6 rows	1–4 rows
Large horizontal	2–8 rows	1–10 rows
-with access	2–8 rows	1–6 rows
Large vertical	2-8 rows	1–6 rows
-with access	2–8 rows	1–4 rows

Table 47. Coil data for unit size 12

Coil Type	Rows	Fin Type	Area (ft²)	Qty–Size (in.)
1/2-inch unit coils (UW, UA, UF, UU)	2 to 8	Aluminum	12.30	1–32.5×54.5
5/8-inch unit coils				
-W,WD, 5W,	All available rows	Aluminum or Copper	11.81	1–31.5×54
-5A, P2, P4, P8, D1, D2, TT	All available rows	Aluminum or Copper	11.25	1–30×54
1-inch unit coil (NS)	1	Aluminum or Copper	11.25	1–30×54
1/2-inch modified coils (WL, LL, FD)	All available rows	Aluminum	9.38	1-24×54
5/8-inch modified coils				
-W, WD, 5W, 5A, P2, P4, P8, D1, D2, TT	All available rows	Aluminum or Copper	9.00	1–24×54
1-inch modified coil (NS)	1	Aluminum or Copper	9.00	1–24×54

Table 48. Filter data for unit size 12

Filter Type	Area (ft²)	Qty–Size (in.)
Flat (2-in., 4-in., and 2-in/4-in high efficiency) pleated, permanent, throwaway media	13.33	6 - 16x20
Angled (2-in. or 4-in.) Pleated, permanent, throwaway media	16.67	6 - 20x20
Side load bag or cartridge	12.33	3 - 20x20 2 - 12x24

Note: 2-inch filters available in permanent, throwaway, or pleated media; 4-inch filters available in pleated media, 65%, 85%, or 95% efficiency; Bag or cartridge filters available in 65%, 85%, or 95% efficiency.

Table 49. Damper areas for unit size 12

Type	A (in)	B (in)	Area (ft²)
Rectangular damper	52.5	13.97	5.09

Type	Dia (in)	Qty	Area (ft²)
Traq damper	16	3	4.19

Table 50. Fan data for unit size 12

Size/type	Housed Fans												Belt-drive Plenum Fans			
	Low Pressure						High Pressure						Low Pressure		High Pressure	
	18-in FC	15-in FC	12-in FC	18-in AF	15-in AF	12-in AF	18-in FC	15-in FC	12-in FC	18-in AF	15-in AF	12-in AF	20-in AF	18-in AF	20-in AF	18-in AF
Fan name	**18FA**	**15FA**	**12FA**	**18AA**	**15AA**	**12AA**	**18FB**	**15FB**	**12FB**	**18AB**	**15AB**	**12AB**	**20PA**	**18PA**	**20PB**	**18PB**
Max rpm	1215	1600	1900	2450	2900	3700	1500	1720	2115	3100	3500	4350	2650	3000	2850	3300
ODP NEMA Premium motor hp range	1-7.5	1-7.5	1-5	1-10	1-10	1-7.5	1-15	1-10	1-10	1-15	1-15	1-10	1-15	1-10	1-15	1-15
Outlet area (ft²)	2.88	2.05	1.46	2.88	2.05	1.46	2.88	2.05	1.46	2.88	2.05	1.46	n/a	n/a	n/a	n/a
Bearing size (in.)	1	1	1	1.1875	1.1875	1	1.4375	1.1875	1.1875	1.5	1.4375	1.4375	1.5	1.1875	1.6875	1.5
Shaft size (in.)	1	1	1	1.1875	1.1875	1	1.4375	1.1875	1.1875	1.5	1.4375	1.4375	1.5	1.1875	1.6875	1.5

Unit Size 14

Table 51. Dimensions (inches) and Weights (pounds) for Unit Size 14

Section type	Length	Weight
Mixing		
-with angled filters	36.00	328.43
-without angled filters	36.00	301.53
-with front/back Traq and top Traq dampers	36.00	438.53
-with top/bottom airfoil (or opening) and front/back Traq dampers	36.00	407.63
-with top Traq and front/back/bottom airfoil dampers (or opening)	36.00	407.63
Filters		
-2-in. angled	26.50	267.25
-4-in. angled	26.50	267.25
-Cartridge (12-in.) or short bag (18-in.)	26.50	242.94
-2-in. flat	14.00	149.86
-4-in. flat	14.00	154.26
-2-in. and 4-in. combination flat	19.00	247.41
-Long bag (30-in.)	42.50	342.93
Access or blank		
-Small horizontal	10.00	102.37
-Medium horizontal	14.00	127.36
-Extended-medium horizontal	19.00	158.61
-Medium-large horizontal	26.50	236.22
-Large horizontal or turning	36.00	301.53
-Extra-large horizontal or turning	42.50	346.21
Coil[1]		
-Small horizontal (with 4-row UW)	10.00	343.45
-Medium horizontal (with 8-row UW)	14.00	811.67
-Extended-medium horizontal (with 8-row UW)	19.00	158.61
-Medium-large horizontal (with 10-row W)	26.50	811.67
-Large horizontal or vertical (with 10-row W)	36.00	876.58
Fan[2]		
-Belt-drive Plenum Fans	42.50	1011.41
-FC Fans	42.50	914.75
-AF Fans	42.50	952.67
Diffuser	14.00	125.01
Discharge plenum		
-Horizontal	36.00	299.18
-Vertical[3]	42.50	335.85

Note: [1]Coil section weights include the coil noted with 144 aluminum fins per foot, standard tubes, and no water. Refer to the coil selection for exact coil weights.[2]Fan section weights include the heaviest fan with the largest ODP motor available.[3]Nominal height shown. Variable plenum height is available from 0.5 to 1.5 of nominal.

Table 52. Coil availability - size 14

Section Type	1/2-inch Coils	5/8-inch Coils
Small	2-4 rows	1 and 2 rows
Medium	2–8 rows	1–4 rows
Extended-medium	2–8 rows	1–8 rows
Medium-large	2-8 rows	1-10 rows
-with access	2–6 rows	1–4 rows
Large horizontal	2–8 rows	1–10 rows
-with access	2–8 rows	1–6 rows
Large vertical	2-8 rows	1–6 rows
-with access	2–8 rows	1–4 rows

Table 53. Coil data for unit size 14

Coil Type	Rows	Fin Type	Area (ft²)	Qty–Size (in.)
1/2-inch unit coils (UW, UA, UF, UU)	2 to 8	Aluminum	13.65	1-32.5x60.5
5/8-inch unit coils				
-W. 5W. D1	All available rows	Aluminum or Copper	13.13	1-31.5x60
-WD, D2	All available rows	Aluminum or Copper	12.91	1-31.5x59
-5A, P2, P4, P8, TT	All available rows	Aluminum or Copper	12.50	1-30x60
1-inch unit coil (NS)	1	Aluminum or Copper	12.50	1–30×60
1/2-inch modified coils (WL, LL, FD)	2 to 8	Aluminum	10.42	1-24x60
5/8-inch modified coils				
-WD, D2	All available rows	Aluminum or Copper	10.00	1-24x60
-W, 5W, 5A, P2, P4, D1, TT	All available rows	Aluminum or Copper	10.00	1-24x60
1-inch modified coil (NS)	1	Aluminum or Copper	10.00	1-24x60

Table 54. Filter data for unit size 14

Filter Type	Area (ft²)	Qty–Size (in.)
Flat (2-in., 4-in., and 2-in/4-in high efficiency) pleated, permanent, throwaway media	14.44	4 - 16x20 2 - 16x25
Angled (2-in. or 4-in.) Pleated, permanent, throwaway media	18.06	2 - 20x25 4 - 20x20
Side load bag or cartridge	13.44	2 - 20x24 1 - 20x20 2 - 12x24

Note: 2-inch filters available in permanent, throwaway, or pleated media; 4-inch filters available in pleated media, 65%, 85%, or 95% efficiency; Bag or cartridge filters available in 65%, 85%, or 95% efficiency.

Table 55. Damper areas for unit size 14

Type	A (in)	B (in)	Area (ft²)
Rectangular damper	41.25	19.72	5.65

Type	Dia (in)	Qty	Area (ft²)
Traq damper	16	3	4.19

Table 56. Fan data for unit size 14

Size/type	Housed Fans												Belt-drive Plenum Fans			
	Low Pressure						High Pressure						Low Pressure		High Pressure	
	18-in FC	15-in FC	12-in FC	18-in AF	15-in AF	12-in AF	18-in FC	15-in FC	12-in FC	18-in AF	15-in AF	12-in AF	22-in AF	20-in AF	22-in AF	20-in AF
Fan name	**18FA**	**15FA**	**12FA**	**18AA**	**15AA**	**12AA**	**18FB**	**15FB**	**12FB**	**18AB**	**15AB**	**12AB**	**22PA**	**20PA**	**22PB**	**20PB**
Max rpm	1215	1600	1900	2450	2900	3700	1500	1720	2115	3100	3500	4350	2320	2650	2650	2850
ODP NEMA Premium motor hp range	1-7.5	1-7.5	1-5	1-10	1-7.5	1-7.5	1-10	1-10	1-10	1-15	1-15	1-10	1-15	1-15	1-20	1-20
Outlet area (ft²)	2.88	2.05	1.46	2.88	2.05	1.46	2.88	2.05	1.46	2.88	2.05	1.46	n/a	n/a	n/a	n/a
Bearing size (in.)	1	1	1	1.1875	1.1875	1	1.4375	1.1875	1.1875	1.5	1.4375	1.4375	1.5	1.5	1.6875	1.6875
Shaft size (in.)	1	1	1	1.1875	1.1875	1	1.4375	1.1875	1.1875	1.5	1.4375	1.4375	1.5	1.5	1.6875	1.6875

Unit Size 17

Table 57. Dimensions (inches) and Weights (pounds) for Unit Size 17

Section type	Length	Weight
Mixing		
-with angled filters	36.00	341.51
-without angled filters	36.00	314.13
-with front/back Traq and top Traq dampers	36.00	451.13
-with top/bottom airfoil (or opening) and front/back Traq dampers	36.00	426.48
-with top Traq and front/back/bottom airfoil dampers (or opening)	36.00	426.48
Filters		
-2-in. angled	24.50	301.26
-4-in. angled	24.50	301.21
-Cartridge (12-in.) or short bag (18-in.)	24.50	240.01
-2-in. flat	14.00	155.21
-4-in. flat	14.00	159.62
-2-in. and 4-in. combination flat	19.00	244.47
-Long bag (30-in.)	44.00	367.42
Access or blank		
-Small horizontal	10.00	106.11
-Medium horizontal	14.00	132.24
-Extended-medium horizontal	19.00	164.91
-Medium-large horizontal	24.50	231.80
-Large horizontal or turning	36.00	314.13
-Extra-large horizontal or turning	44.00	371.40
Coil[1]		
-Small horizontal (with 4-row UW)	10.00	393.46
-Medium horizontal (with 8-row UW)	14.00	914.77
-Extended-medium horizontal (with 8-row UW)	19.00	164.91
-Medium-large horizontal (with 10-row W)	24.50	914.77
-Large horizontal or vertical (with 10-row W)	36.00	996.69
Fan[2]		
-Belt-drive Plenum Fans	44.00	1199.24
-FC Fans	44.00	1032.55
-AF Fans	44.00	1076.13
Diffuser	14.00	129.89
Discharge plenum		
-Horizontal	36.00	311.78
-Vertical[3]	44.00	349.93

Note: [1]Coil section weights include the coil noted with 144 aluminum fins per foot, standard tubes, and no water. Refer to the coil selection for exact coil weights.[2]Fan section weights include the heaviest fan with the largest ODP motor available.[3]Nominal height shown. Variable plenum height is available from 0.5 to 1.5 of nominal.

Table 58. Coil availability - size 17

Section Type	1/2-inch Coils	5/8-inch Coils
Small	2-4 rows	1 and 2 rows
Medium	2–8 rows	1–4 rows
Extended-medium	2–8 rows	1–8 rows
Medium-large	2-8 rows	1-10 rows
-with access	2–6 rows	1–4[2] rows
Large horizontal	2–8 rows	1–10 rows
-with access	2–8 rows	1–6 rows
Large vertical	2-8 rows	1–6 rows
-with access	2–8 rows	1–4 rows

Note: [2]Unit size 17 has a 3-row maximum for stacked coils.

Table 59. Coil data for unit size 17

Coil Type	Rows	Fin Type	Area (ft²)	Qty–Size (in.)
1/2-inch unit coils (UW, UA, UF, UU)	2 to 8	Aluminum	16.81	1–40×60.5
5/8-inch unit coils				
-W, D1	4 to 10	Aluminum or Copper	15.63	1-37.5x60
-W, D1	3	Aluminum or Copper	15.00	1-36x60
-WD, D2	6 to 10	Aluminum or Copper	15.36	1-37.5x59
-5W	All available rows	Aluminum or Copper	15.00	1-36x60
-5A, TT	All available rows	Aluminum or Copper	13.75	1-33x60
1-inch unit coil (NS)	1	Aluminum or Copper	13.75	1–33×60
1/2-inch modified coils (WL, LL, FD)	2 to 8	Aluminum	13.02	1-30x60
5/8-inch modified coils				
-W, 5W, 5A, P2, P4, P8, D1, TT	All available rows	Aluminum or Copper	12.50	1-30x60
-WD, D2	All available rows	Aluminum or Copper	12.29	1-30X59
1-inch modified coil (NS)	1	Aluminum or Copper	12.50	1-30x60

Table 60. Filter data for unit size 17

Filter Type	Area (ft²)	Qty–Size (in.)
Flat (2-in., 4-in., and 2-in/4-in high efficiency) pleated, permanent, throwaway media	18.89	4 - 20x24 2 - 20x20
Angled (2-in. or 4-in.) Pleated, permanent, throwaway media	28.89	4 - 16x25 8 - 16x20
Side load bag or cartridge	18.89	4 - 20x24 2 - 20x20

Note: 2-inch filters available in permanent, throwaway, or pleated media; 4-inch filters available in pleated media, 65%, 85%, or 95% efficiency; Bag or cartridge filters available in 65%, 85%, or 95% efficiency.

Table 61. Damper areas for unit size 17

Type	A (in)	B (in)	Area (ft²)
Rectangular damper	51	19.72	6.98

Type	Dia (in)	Qty	Area (ft²)
Traq damper	16	3	4.19

Table 62. Fan data for unit size 17

Size/type	Housed Fans												Belt-drive Plenum Fans			
	Low Pressure						High Pressure						Low Pressure		High Pressure	
	20-in FC	18-in FC	15-in FC	20-in AF	18-in AF	15-in AF	20-in FC	18-in FC	15-in FC	20-in AF	18-in AF	15-in AF	25-in AF	22-in AF	25-in AF	22-in AF
Fan name	**20FA**	**18FA**	**15FA**	**20AA**	**18AA**	**15AA**	**20FB**	**18FB**	**15FB**	**20AB**	**18AB**	**15AB**	**25PA**	**22PA**	**25PB**	**22PB**
Max rpm	1050	1215	1600	2300	2450	2900	1330	1500	1720	2750	3100	3500	2070	2320	2350	2650
ODP NEMA Premium motor hp range	1.5-20	1.5-7.5	1.5-7.5	1.5-15	1.5-10	1.5-10	1.5-20	1.5-15	1.5-10	1.5-20	1.5-20	1.5-15	1.5-20	1.5-15	1.5-25	1.5-20
Outlet area (ft²)	4.38	2.88	2.05	4.38	2.88	2.05	4.38	2.88	2.05	4.38	2.88	2.05	n/a	n/a	n/a	n/a
Bearing size (in.)	1.5	1	1	1.5	1.1875	1.1875	1.6875	1.4375	1.1875	1.6875	1.5	1.4375	1.6875	1.5	1.6875	1.6875
Shaft size (in.)	1.5	1	1	1.5	1.1875	1.1875	1.6875	1.4375	1.1875	1.6875	1.5	1.4375	1.6875	1.5	1.6875	1.6875

Unit Size 21

Table 63. Dimensions (inches) and Weights (pounds) for Unit Size 21

Section type	Length	Weight
Mixing		
-with angled filters	34.00	361.86
-without angled filters	34.00	328.72
-with front/back Traq and top Traq dampers	50.25	588.54
-with top/bottom airfoil (or opening) and front/back Traq dampers	34.00	509.74
-with top Traq and front/back/bottom airfoil dampers (or opening)	50.25	588.54
Filters		
-2-in. angled	24.50	334.37
-4-in. angled	24.50	335.80
-Cartridge (12-in.) or short bag (18-in.)	24.50	262.69
-2-in. flat	14.00	172.72
-4-in. flat	14.00	177.64
-2-in. and 4-in. combination flat	19.00	270.13
-Long bag (30-in.)	50.25	446.31
Access or blank		
-Small horizontal	10.00	115.98
-Medium horizontal	14.00	144.50
-Extended-medium horizontal	19.00	180.16
-Medium-large horizontal	24.50	254.42
-Large horizontal or turning	34.00	328.72
-Extra-large horizontal or turning	50.25	455.81
Coil[1]		
-Small horizontal (with 4-row UW)	10.00	478.25
-Medium horizontal (with 8-row UW)	14.00	1125.98
-Extended-medium horizontal (with 8-row UW)	19.00	180.16
-Medium-large horizontal (with 10-row W)	24.50	1125.98
-Large horizontal or vertical (with 10-row W)	34.00	1204.85
Fan[2]		
-Belt-drive Plenum Fans	50.25	1452.29
-FC Fans	50.25	1319.90
-AF Fans	50.25	1468.62
Diffuser	14.00	142.15
Discharge plenum		
-Horizontal	34.00	326.37
-Vertical[3]	50.25	367.96

Note: [1]Coil section weights include the coil noted with 144 aluminum fins per foot, standard tubes, and no water. Refer to the coil selection for exact coil weights.[2]Fan section weights include the heaviest fan with the largest ODP motor available.[3]Nominal height shown. Variable plenum height is available from 0.5 to 1.5 of nominal.

Table 64. Coil availability - size 21

Section Type	1/2-inch Coils	5/8-inch Coils
Small	2-4 rows	1 and 2 rows
Medium	2–8 rows	1–4 rows
Extended-medium	2–8 rows	1–8[1] rows
Medium-large	2-8 rows	1-10[1] rows
-with access	2–6 rows	1–4[2] rows
Large horizontal	2–8 rows	1–10 rows
-with access	2–8 rows	1–6[3] rows
Large vertical	2-8 rows	1–6 rows
-with access	2–8 rows	1–4 rows

Note: [1]Unit size 21 has a 6-row maximum for stacked coils. [2]Unit size 21 has a 3-row maximum for stacked coils. [3]Unit size 21 has a 4-row maximum for stacked coils.

Table 65. Coil data for unit size 21

Coil Type	Rows	Fin Type	Area (ft²)	Qty–Size (in.)
1/2-inch unit coils (UW, UA, UF, UU)	2 to 8	Aluminum	20.81	1–43.75×68.5
5/8-inch unit coils				
-W, 5W, D1	All available rows	Aluminum or Copper	19.83	1-42x68
-WD, D2	6 TO 10	Aluminum or Copper	19.54	1-42x67
-5A, P2, P4, P8, TT	All available rows	Aluminum or Copper	17.00	2-18x68
1-inch unit coil (NS)	1	Aluminum or Copper	17.00	2–18×68
1/2-inch modified coils (WL, LL, FD)	2 to 8	Aluminum	15.94	1-33x68
5/8-inch modified coils				
-W, 5W, 5A, D1, TT, NS	All available rows	Aluminum or Copper	15.58	1-33x68
-WD, D2	All available rows	Aluminum or Copper	15.35	1-33x67
1-inch modified coil (NS)	1	Aluminum or Copper	15.58	1-33x68

Table 66. Filter data for unit size 21

Filter Type	Area (ft²)	Qty–Size (in.)
Flat (2-in., 4-in., and 2-in/4-in high efficiency) pleated, permanent, throwaway media	21.53	3 - 25x20 1 - 25x16 3 - 16x25
Angled (2-in. or 4-in.) Pleated, permanent, throwaway media	33.33	12 - 25x16
Side load bag or cartridge	22.00	3 - 24x24 3 - 20x24

Note: 2-inch filters available in permanent, throwaway, or pleated media; 4-inch filters available in pleated media, 65%, 85%, or 95% efficiency; Bag or cartridge filters available in 65%, 85%, or 95% efficiency.

Table 67. Damper areas for unit size 21

Type	A (in)	B (in)	Area (ft²)
Rectangular damper	63	19.72	8.63

Type	Dia (in)	Qty	Area (ft²)
Traq damper	20	3	6.54

Table 68. Fan data for unit size 21

Size/type	Housed Fans												Belt-drive Plenum Fans			
	Low Pressure						High Pressure						Low Pressure		High Pressure	
	22-in FC	20-in FC	18-in FC	22-in AF	20-in AF	18-in AF	22-in FC	20-in FC	18-in FC	22-in AF	20-in AF	18-in AF	28-in AF	25-in AF	28-in AF	25-in AF
Fan name	**22FA**	**20FA**	**18FA**	**22AA**	**20AA**	**18AA**	**22FB**	**20FB**	**18FB**	**22AB**	**20AB**	**18AB**	**28PA**	**25PA**	**28PB**	**25PB**
Max rpm	950	1050	1215	1900	2300	2450	1200	1330	1500	2500	2750	3100	1850	2070	2100	2350
ODP NEMA Premium motor hp range	2-20	2-20	2-7.5	2-15	2-15	2-10	2-20	2-20	2-15	2-25	2-25	2-20	2-25	2-20	2-30	2-30
Outlet area (ft²)	5.54	4.38	2.88	5.54	4.38	2.88	5.54	4.38	2.88	5.54	4.38	2.88	n/a	n/a	n/a	n/a
Bearing size (in.)	1.5	1.5	1	1.5	1.5	1.1875	2	1.6875	1.4375	2	1.6875	1.5	2	1.6875	1.6875	1.6875
Shaft size (in.)	1.5	1.5	1	1.5	1.5	1.1875	2	1.6875	1.4375	2	1.6875	1.5	2	1.6875	1.6875	1.6875

Unit Size 25

Table 69. Dimensions (inches) and Weights (pounds) for Unit Size 25

Section type	Length	Weight
Mixing[1]		
-with angled filters	46.00	480.95
-without angled filters	46.00	440.79
-with front/back Traq and top Traq dampers	46.00	700.61
-with top/bottom airfoil (or opening) and front/back Traq dampers	46.00	629.00
-with top Traq and front/back/bottom airfoil dampers (or opening)	46.00	629.00
Filters		
-2-in. angled	24.50	374.97
-4-in. angled	24.50	374.64
-Cartridge (12-in.) or short bag (18-in.)	24.50	290.18
-2-in. flat	14.00	182.98
-4-in. flat	14.00	190.36
-2-in. and 4-in. combination flat	19.00	297.67
-Long bag (30-in.)	56.50	528.99
Access or blank		
-Small horizontal	10.00	120.34
-Medium horizontal	14.00	150.19
-Extended-medium horizontal	19.00	187.51
-Medium-large horizontal	24.50	265.49
-Large horizontal or turning	46.00	440.79
-Extra-large horizontal or turning	56.50	526.39
Coil[2]		
-Small horizontal (with 4-row UW)	10.00	545.60
-Medium horizontal (with 8-row UW)	14.00	1300.03
-Extended-medium horizontal (with 8-row UW)	19.00	187.51
-Medium-large horizontal (with 10-row W)	24.50	1300.03
-Large horizontal or vertical (with 10-row W)	46.00	1489.95
Fan[3]		
-Belt-drive Plenum Fans	56.50	1542.01
-FC Fans	56.50	1505.12
-AF Fans	56.50	1602.85
Diffuser	19	185.16
Discharge plenum		
-Horizontal	46.00	438.44
-Vertical[4]	56.50	490.22

Note: [1]Mixing box section is length of extra-large access for size 25 top and back standard Traq. [2]Coil section weights include the coil noted with 144 aluminum fins per foot, standard tubes, and no water. Refer to the coil selection for exact coil weights.[3]Fan section weights include the heaviest fan with the largest ODP motor available.[4]Nominal height shown. Variable plenum height is available from 0.5 to 1.5 of nominal.

Table 70. Coil availability - size 25

Section Type	1/2-inch Coils	5/8-inch Coils
Small	2-4 rows	1 and 2 rows
Medium	2–8 rows	1–4 rows
Extended-medium	2–8 rows	1–8[1] rows
Medium-large	2-8 rows	1-10[1] rows
-with access	2–6 rows	1–3 rows
Large horizontal	2–8 rows	1–10 rows
-with access	2–8 rows	1–10 rows
Large vertical	2-8 rows	1–8 rows
-with access	2–8 rows	1–8 rows

Note: [1]Unit size 25 has a 6-row maximum for stacked coils.

Table 71. Coil data for unit size 25

Coil Type	Rows	Fin Type	Area (ft²)	Qty–Size (in.)
1/2-inch unit coils (UW, UA, UF, UU)	2 to 8	Aluminum	24.97	1–52.5×68.5
5/8-inch unit coils				
-W, 5W, D1	All available rows	Aluminum or Copper	24.08	1-51x68
-WD, D2, 5D	6 TO 10	Aluminum or Copper	23.73	1-51x67
-5A, P2, P4, P8, TT	All available rows	Aluminum or Copper	22.67	2-24x68
1-inch unit coil (NS)	1	Aluminum or Copper	22.67	2–24×68
1/2-inch modified coils (WL, LL, FD)	2 to 8	Aluminum	17.12	1-36x68
5/8-inch modified coils				
-WD, D2	6 TO 10	Aluminum or Copper	17.00	1-36x68
-W, 5W, D1	All available rows	Aluminum or Copper	17.00	1-36x68
-5A, P2, P4, P8, TT	All available rows	Aluminum or Copper	17.00	2-18x68
1-inch modified coil (NS)	1	Aluminum or Copper	17.00	2-18x68

Table 72. Filter data for unit size 25

Filter Type	Area (ft²)	Qty–Size (in.)
Flat (2-in., 4-in., and 2-in/4-in high efficiency) pleated, permanent, throwaway media	27.11	6 - 20x20 2 - 20x16 3 - 12x24
Angled (2-in. or 4-in.) Pleated, permanent, throwaway media	50.00	18 - 25x16
Side load bag or cartridge	26.00	6 - 20x24 3 - 12x24

Note: 2-inch filters available in permanent, throwaway, or pleated media; 4-inch filters available in pleated media, 65%, 85%, or 95% efficiency; Bag or cartridge filters available in 65%, 85%, or 95% efficiency.

Table 73. Damper areas for unit size 25

Type	A (in)	B (in)	Area (ft²)
Rectangular damper	58.5	25.47	10.35

Type	Dia (in)	Qty	Area (ft²)
Traq damper	20	3	6.54

Table 74. Fan data for unit size 25

Size/type	Housed Fans												Belt-drive Plenum Fans			
	Low Pressure						High Pressure						Low Pressure		High Pressure	
	22-in FC	20-in FC	18-in FC	22-in AF	20-in AF	18-in AF	22-in FC	20-in FC	18-in FC	22-in AF	20-in AF	18-in AF	28-in AF	25-in AF	28-in AF	25-in AF
Fan name	22FA	20FA	18FA	22AA	20AA	18AA	22FB	20FB	18FB	22AB	20AB	18AB	28PA	25PA	28PB	25PB
Max rpm	950	1050	1215	1900	2300	2450	1200	1330	1500	2500	2750	3100	1850	2070	2100	2350
ODP NEMA Premium motor hp range	3-20	3-20	3-7.5	3-15	3-15	3-10	3-25	3-25	3-15	3-30	3-30	3-20	3-25	3-20	3-30	3-30
Outlet area (ft²)	5.54	4.38	2.88	5.54	4.38	2.88	5.54	4.38	2.88	5.54	4.38	2.88	n/a	n/a	n/a	n/a
Bearing size (in.)	1.5	1.5	1	1.5	1.5	1.1875	2	1.6875	1.4375	2	1.6875	1.5	2	1.6875	1.6875	1.6875
Shaft size (in.)	1.5	1.5	1	1.5	1.5	1.1875	2	1.6875	1.4375	2	1.6875	1.5	2	1.6875	1.6875	1.6875

Unit Size 30

Table 75. Dimensions (inches) and Weights (pounds) for Unit Size 30

Section type	Length	Weight
Mixing		
-with angled filters	46.00	536.42
-without angled filters	46.00	490.26
-with front/back Traq and top Traq dampers	46.00	816.02
-with top/bottom airfoil (or opening) and front/back Traq dampers	46.00	718.17
-with top Traq and front/back/bottom airfoil dampers (or opening)	56.50	816.02
Filters		
-2-in. angled	24.50	422.00
-4-in. angled	24.50	422.06
-Cartridge (12-in.) or short bag (18-in.)	24.50	322.53
-2-in. flat	14.00	204.23
-4-in. flat	14.00	212.93
-2-in. and 4-in. combination flat	19.00	331.36
-Long bag (30-in.)	56.50	585.92
Access or blank		
-Small horizontal	10.00	133.84
-Medium horizontal	14.00	166.77
-Extended-medium horizontal	19.00	207.92
-Medium-large horizontal	24.50	296.11
-Large horizontal or turning	46.00	490.26
-Extra-large horizontal or turning	56.50	585.08
Coil[1]		
-Small horizontal (with 4-row UW)	10.00	622.23
-Medium horizontal (with 8-row UW)	14.00	1512.45
-Extended-medium horizontal (with 8-row UW)	19.00	207.92
-Medium-large horizontal (with 10-row W)	24.50	1512.45
-Large horizontal or vertical (with 10-row W)	46.00	1721.50
Fan[2]		
-Belt-drive Plenum Fans	56.50	1800.32
-FC Fans	56.50	1731.00
-AF Fans	56.50	1878.37
Diffuser	19.00	205.57
Discharge plenum		
-Horizontal	46.00	487.91
-Vertical[3]	56.50	548.02

Note: [1]Coil section weights include the coil noted with 144 aluminum fins per foot, standard tubes, and no water. Refer to the coil selection for exact coil weights.[2]Fan section weights include the heaviest fan with the largest ODP motor available.[3]Nominal height shown. Variable plenum height is available from 0.5 to 1.5 of nominal.

Table 76. Coil availability - size 30

Section Type	1/2-inch Coils	5/8-inch Coils
Small	2-4 rows	1 and 2 rows
Medium	2–8 rows	1–4 rows
Extended-medium	2–8 rows	1–8[1] rows
Medium-large	2-8 rows	1-10[1] rows
-with access	2–6 rows	1–3 rows
Large horizontal	2–8 rows	1–10 rows
-with access	2–8 rows	1–10 rows
Large vertical	2-8 rows	1–8 rows
-with access	2–8 rows	1–8 rows

Note: [1]Unit size 30 has a 6-row maximum for stacked coils.

Table 77. Coil data for unit size 30

Coil Type	Rows	Fin Type	Area (ft²)	Qty–Size (in.)
1/2-inch unit coils (UW, UA, UF, UU)	2 to 8	Aluminum	29.90	1–52.5×82
5/8-inch unit coils				
-W, 5W, WD, D1, D2, 5D	All available rows	Aluminum or Copper	28.69	1-51x81
-5A, P2, P4, P8, TT	All available rows	Aluminum or Copper	27.00	2-24x81
1-inch unit coil (NS)	1	Aluminum or Copper	22.67	2–24x81
1/2-inch modified coils (WL, LL, FD)	2 to 8	Aluminum	20.39	1-36x81
5/8-inch modified coils				
-W, 5W, WD, D1, D2	All available rows	Aluminum or Copper	20.25	1-36x81
-5A, P2, P4, P8, TT	All available rows	Aluminum or Copper	20.25	2-18x81
1-inch modified coil (NS)	1	Aluminum or Copper	20.25	2-18x81

Table 78. Filter data for unit size 30

Filter Type	Area (ft²)	Qty–Size (in.)
Flat (2-in., 4-in., and 2-in/4-in high efficiency) pleated, permanent, throwaway media	30.44	6 - 20x24 2 - 20x16 3 - 12x24
Angled (2-in. or 4-in.) Pleated, permanent, throwaway media	56.67	6 - 16x25 18 - 16x20
Side load bag or cartridge	28.22	8 - 20x20 3 - 12x24

Note: 2-inch filters available in permanent, throwaway, or pleated media; 4-inch filters available in pleated media, 65%, 85%, or 95% efficiency; Bag or cartridge filters available in 65%, 85%, or 95% efficiency.

Table 79. Damper areas for unit size 30

Type	A (in)	B (in)	Area (ft²)
Rectangular damper	68	25.47	12.03

Type	Dia (in)	Qty	Area (ft²)
Traq damper	24	3	9.42

Table 80. Fan data for unit size 30

Size/type	Housed Fans												Belt-drive Plenum Fans			
	Low Pressure						High Pressure						Low Pressure		High Pressure	
	25-in FC	22-in FC	20-in FC	25-in AF	22-in AF	20-in AF	25-in FC	22-in FC	20-in FC	25-in AF	22-in AF	20-in AF	32-in AF	28-in AF	32-in AF	28-in AF
Fan name	**25FA**	**22FA**	**20FA**	**25AA**	**22AA**	**20AA**	**25FB**	**22FB**	**20FB**	**25AB**	**22AB**	**20AB**	**32PA**	**28PA**	**32PB**	**28PB**
Max rpm	850	950	1050	1650	1900	2300	1025	1200	1330	2200	2500	2750	1600	1850	1800	2100
ODP NEMA Premium motor hp range	3-20	3-20	3-20	3-20	3-15	3-15	3-30	3-30	3-25	3-40	3-30	3-30	3-25	3-25	3-40	3-40
Outlet area (ft²)	6.94	5.54	4.38	6.94	5.54	4.38	6.94	5.54	4.38	6.94	5.54	4.38	n/a	n/a	n/a	n/a
Bearing size (in.)	1.6875	1.5	1.5	1.6875	1.5	1.5	2.4375	2	1.6875	2	2	1.6875	2	2	1.6875	1.6875
Shaft size (in.)	1.6875	1.5	1.5	1.6875	1.5	1.5	2.4375	2	1.6875	2	2	1.6875	2	2	1.6875	1.6875

Coil Data

Drain Pans

Table 81. Drain pan access availability

Unit Size	Drain Pan Space (inches)				
	Small	Medium	Extend-Medium	Medium-Large	Large
3	7.5	11.5	16.5	22	31.5
4	7.5	11.5	16.5	22	31.5
6	7.5	11.5	16.5	22	31.5
8	7.5	11.5	16.5	24	33.5
10	7.5	11.5	16.5	24	33.5
12	7.5	11.5	16.5	24	33.5
14	7.5	11.5	16.5	24	33.5
17	7.5	11.5	16.5	22	33.5
21	7.5	11.5	16.5	22	31.5
25	7.5	11.5	16.5	22	43.5
30	7.5	11.5	16.5	22	43.5

Table 82. Coil Depth by Rows (inches)

Tube Diameter	Coil Rows						
	1	2	3	4	6	8	10
1/2 inch	n/a	4.5	n/a	6.7	8.8	11	n/a
5/8 inch	4	6.5	8	9.5	12.5	15.5	18.5
1 inch	5.25	n/a	n/a	n/a	n/a	n/a	n/a

Note: Example: In a size 30 with a 4-row UW coil in an extended-medium coil section, there would be 9.8 inches of dran pan exposed beyond the coil casing for cleaning access.

Connection Diameters for Hydronic and Steam Coils

Table 83. Water coils with 1/2-inch diameter

Coil Type	Rows	Unit Sizes	Quantity	Connection Diameter (inches)		
				Supply	Return	Drain/Vent
UW	2, 4, 6, 8	3-6	1	1.50	1.50	0.38
		8-14	1	2.00	2.00	0.38
		17-30	1	2.50	2.50	0.38
UA	2	3-14	1	1.50	1.50	0.38
		17-30	1	2.00	2.00	0.38
UU	4, 8	12-30	1	2.50	2.50	0.38
LL	4, 6, 8	8-30	1	2.50	2.50	0.38
WL	2, 4, 6, 8	3-10	1	1.50	1.50	0.38
		12-21	1	2.00	2.00	0.38
		25-30	1	2.50	2.50	0.38

Note: All connections have external threads.

Table 84. Water coils with 5/8-inch tubes

Coil Type	Rows	Header Height (inches)	Connection Diameter (inches)		
			Supply	Return	Drain/Vent
5W	1	12–21	1.25	1.25	0.38
		24–54	1.50	1.50	0.38
	2	12–27	2.00	2.00	0.38
		30–54	2.50	2.50	0.38
W	1	12	1.25	1.25	0.50
		18–33	2.50	2.50	0.50
	3, 4, 6, 8, 10	12–27	2.00	2.00	0.38
		30–55.5	2.50	2.50	0.38
5A	2	12–27	2.00	2.00	0.38
		30–33	2.50	2.50	0.38
WD	6, 8, 10	18–55.5	2.50	2.50	0.38
P2	2, 4, 6	12–30	0.75	0.75	0.50
P4	2, 4, 6, 8	12–30	1.00	1.00	0.50
P8	4, 8	18–30	1.25	1.25	0.50
D2	4, 6, 8, 10	12–33	2.50	2.50	0.50
D1	3, 4, 6, 8, 10	12–27	2.00	2.00	0.38
		30–33	2.50	2.50	0.38
TT	1, 2	12–33	0.75	0.75	n/a

Note: 5A, 5W, W (4–10 row), D1, D2, and WD connections have external threads; W (1-row), P2, P4, P8, and TT connections have internal threads.

Table 85. Steam coils with 1-inch tubes

Coil Type	Rows	Header Height (inches)	Connection Diameter (inches)		
			Supply	Return	Drain/Vent
NS	1	12	1.50	1.00	1.00
		18	2.00	1.00	1.00
		24	2.50	1.25	1.25
		30–33	3.00	1.25	1.25

Note: All connections have internal threads.

Refrigerant Coil Connections

Table 86. Type UF refrigerant coil connection sizes for unit sizes 3 to 30

Unit Size	Header Height (inches)	Rows	Distributor Tube	Number of Circuits	Circuiting	Connection Diameter (inches)					
						1 Distributor		2 Distributors		4 Distributors	
						Liquid	Suction	Liquid	Suction	Liquid	Suction
3, 4	20	4, 6, 8	0.25	15	Full	n/a	n/a	1.13	1.63	n/a	n/a
			0.19	15	Full	n/a	n/a	1.13	1.63	n/a	n/a
		4, 6	0.25	7	Half	1.13	1.63	0.88	1.38	n/a	n/a
			0.19	7	Half	1.13	1.63	0.63	1.38	n/a	n/a
		4	0.25	3	Quarter	0.88	1.38	0.88	1.38	n/a	n/a
			0.19	3	Quarter	0.63	1.38	0.63	1.38	n/a	n/a
6	26	4, 6, 8	0.25	20	Full	n/a	n/a	1.13	1.63	n/a	n/a
			0.19	20	Full	n/a	n/a	1.13	1.63	n/a	n/a
		4, 6	0.25	10	Half	1.13	1.63	0.88	1.38	n/a	n/a
			0.19	10	Half	1.13	1.63	0.88	1.38	n/a	n/a
		4	0.25	5	Quarter	0.88	1.38	0.88	1.38	n/a	n/a
			0.19	5	Quarter	0.88	1.38	0.63	1.38	n/a	n/a
8, 10	28	4, 6, 8	0.25	22	Full	n/a	n/a	1.38	1.63	n/a	n/a
			0.19	22	Full	n/a	n/a	1.13	1.63	n/a	n/a
		4, 6	0.25	11	Half	1.13	1.63	0.88	1.38	n/a	n/a
			0.19	11	Half	1.13	1.63	0.88	1.38	n/a	n/a
		4	0.25	5	Quarter	0.88	1.38	0.88	1.38	n/a	n/a
			0.19	5	Quarter	0.63	1.38	0.63	1.38	n/a	n/a
12, 14	32	4, 6, 8	0.25	25	Full	n/a	n/a	1.38	1.63	n/a	n/a
			0.19	25	Full	n/a	n/a	1.13	1.63	n/a	n/a
		4, 6	0.25	12	Half	1.38	1.63	1.13	1.38	n/a	n/a
			0.19	12	Half	1.13	1.63	0.88	1.38	n/a	n/a
		4	0.25	6	Quarter	1.13	1.38	0.88	1.38	n/a	n/a
			0.19	6	Quarter	0.88	1.38	0.63	1.38	n/a	n/a
17	40	4, 6, 8	0.25	31	Full	n/a	n/a	n/a	n/a	1.13	Note[2]
			0.19	31	Full	n/a	n/a	n/a	n/a	Note[1]	
		4, 6	0.25	15	Half	n/a	n/a	1.13	1.38	n/a	n/a
			0.19	15	Half	n/a	n/a	0.88	1.38	n/a	n/a
21	43	4, 6, 8	0.25	34	Full	n/a	n/a	n/a	n/a	1.13	1.63
			0.19	34	Full	n/a	n/a	n/a	n/a	1.13	1.63
		4, 6	0.25	17	Half	n/a	n/a	1.13	1.63	0.88	1.38
			0.19	17	Half	n/a	n/a	1.13	1.63	0.88	1.38
25, 30	52	4, 6, 8	0.25	41	Full	n/a	n/a	n/a	n/a	1.13	1.63
			0.19	41	Full	n/a	n/a	n/a	n/a	1.13	1.63
		4, 6	0.25	20	Half	n/a	n/a	1.38	1.63	0.88	1.38
			0.19	20	Half	n/a	n/a	1.13	1.63	0.88	1.38

Note: [1]Three connections are 0.88 inch and one is 1.13 inches. [2]Three connections are 1.38 inches and one is 1.63 inches.

Coil Circuiting

Refrigerant coil circuiting is first defined by how the distributors are arranged on the coil and then by the number of tubes on the coil being fed refrigerant.

Distributor Arrangement

The term *standard circuiting* means the number of distributors used on a coil is the minimum required to meet capacity. If more than one distributor is required, then the coil is horizontally split so sections of the coil can be de-energized to unload the coil.

The term *horizontally split* circuiting means that at a minimum, each coil (or each coil in a bank) will have two or more distributors per coil. As each coil is horizontally split, sections of the coil can be de-energized to unload the coil.

The term *intertwined circuiting* means that at a minimum each coil (or each coil in a bank) will have two or more distributors per coil. Since each distributor is circuited from the top to the bottom of the coil, the full face of the coil remains energized even if a circuit is de-energized to unload the coil. If four distributors are used on a coil, then the coil is first horizontally split, with the top half of the coil intertwined using two distributors, and the bottom half of the coil intertwined using the other two distributors.

Distributor Circuiting

The terms *full, half, and quarter* refer to the number of tubes on a coil being fed refrigerant by each distributor of that coil. For example, full means that each tube in one row of the coil is being fed refrigerant from the distributor(s), while half means every other tube in a row is being fed refrigerant.

Circuiting Example

Table 87 lists standard distributor arrangements (minimum number or distributors) for UF coils. On a size 12 unit, 6-row coil with half circuiting (every other tube in a row being fed), there is one distributor, with 12 tubes in one row of the coil being fed refrigerant.

Circuiting data is show by unit size and coil rows.

Table 87. Type UF coil standard circuiting

Unit Size	Header Height (inches)	Coil Rows	Full		Half		Quarter	
			Dist Qty	Circuits per Dist	Dist Qty	Circuits per Dist	Dist Qty	Circuits per Dist
3, 4	20	4	2	7, 8	1	78	1	4
		6	2	7, 8	1	7	n/a	n/a
		8	2	7, 8	n/a	n/a	n/a	n/a
6	26	4	2	10, 10	1	10	1	5
		6	2	10, 10	1	10	n/a	n/a
		8	2	10, 10	n/a	n/a	n/a	n/a
8, 10	28	4	2	11, 11	1	11	1	5
		6	2	11, 11	1	11	n/a	n/a
		8	2	11, 11	n/a	n/a	n/a	n/a
12, 14	32	4, 6	2	12, 13	1	12	1	6
		8	2	12, 13	n/a	n/a	n/a	n/a
17	40	4, 6	4	7, 8, 8, 8	2	7, 8	n/a	n/a
		8	4	7, 8, 8, 8	n/a	n/a	n/a	n/a
21	43	4, 6	4	8, 8, 9, 9	2	8, 9	n/a	n/a
		8	4	8, 8, 9, 9	n/a	n/a	n/a	n/a
25, 30	52	4, 6	4	10, 10, 10, 11	2	10, 10	n/a	n/a
		8	4	10, 10, 10, 11	n/a	n/a	n/a	n/a

Table 88. Type UF coil horizontal split and intertwined circuiting

Unit Size	Header Height (inches)	Coil Rows	Full		Half		Quarter	
			Dist Qty	Circuits per Dist	Dist Qty	Circuits per Dist	Dist Qty	Circuits per Dist
3, 4	20	4	2	7, 8	2	3, 4	2	2, 2
		6	2	7, 8	2	3, 4	n/a	n/a
		8	2	7, 8	n/a	n/a	n/a	n/a
6	26	4	2	10, 10	2	5, 5	2	2, 3
		6	2	10, 10	2	5, 5	n/a	n/a
		8	2	10, 10	n/a	n/a	n/a	n/a
8, 10	28	4	2	11, 11	2	5, 5	2	2, 3
		6	2	11, 11	2	5, 5	n/a	n/a
		8	2	11, 11	n/a	n/a	n/a	n/a
12, 14	32	4, 6	2	12, 13	2	6, 6	2	3, 3
		8	2	12, 13	n/a	n/a	n/a	n/a
17	40	4, 6	4	7, 8, 8, 8	2	7, 8	n/a	n/a
		8	4	7, 8, 8, 8	n/a	n/a	n/a	n/a
21	43	4, 6	4	8, 8, 9, 9	4	4, 4, 4, 5	n/a	n/a
		8	4	8, 8, 9, 9	n/a	n/a	n/a	n/a
25, 30	52	4, 6	4	10, 10, 10, 11	4	5, 5, 5, 5	n/a	n/a
		8	4	10, 10, 10, 11	n/a	n/a	n/a	n/a

Table 89. Type FD coil standard circuiting

Unit Size	Header Height (inches)	Coil Rows	Full		Half		Quarter	
			Dist Qty	Circuits per Dist	Dist Qty	Circuits per Dist	Dist Qty	Circuits per Dist
8 or 10	18	4	1	7	1	4	n/a	n/a
		6	1	7	n/a	n/a	n/a	n/a
12, 14	24	4	1	9	1	4	n/a	n/a
		6	1	9	n/a	n/a	n/a	n/a
17	30	4	1	12	1	6	n/a	n/a
		6	1	12	n/a	n/a	n/a	n/a
21	33	4	1	13	1	6	n/a	n/a
		6	1	13	n/a	n/a	n/a	n/a
25 or 30	36	4	n/a	n/a	n/a	n/a	n/a	n/a
		6	n/a	n/a	n/a	n/a	n/a	n/a

Table 90. Type FD coil horizontal split circuiting

Unit Size	Header Height (inches)	Coil Rows	Full		Half		Quarter	
			Dist Qty	Circuits per Dist	Dist Qty	Circuits per Dist	Dist Qty	Circuits per Dist
8 or 10	18	4	2	7	n/a	n/a	n/a	n/a
		6	2	7	n/a	n/a	n/a	n/a
12, 14	24	4	1	9	1	10	n/a	n/a
		6	1	9	1	10	n/a	n/a
17	30	4	2	12	n/a	n/a	n/a	n/a
		6	2	12	n/a	n/a	n/a	n/a
21	33	4	2	13	n/a	n/a	n/a	n/a
		6	2	13	n/a	n/a	n/a	n/a
25 or 30	36	4	4	7	n/a	n/a	n/a	n/a
		6	4	7	n/a	n/a	n/a	n/a

Table 91. Type FD coil intertwined circuiting

Unit Size	Header Height (inches)	Coil Rows	Full		Half		Quarter	
			Dist Qty	Circuits per Dist	Dist Qty	Circuits per Dist	Dist Qty	Circuits per Dist
8 or 10	18	4	2	7	2	3, 4	2	2
		6	2	7	2	3, 4	n/a	n/a
12, 14	24	4	1	9, 10	2	4, 5	2	2
		6	1	9, 10	2	4, 5	n/a	n/a
17	30	4	2	12	2	6	2	3
		6	2	12	2	6	n/a	n/a
21	33	4	2	13	2	6, 7	2	3
		6	2	13	2	6, 7	n/a	n/a
25 or 30	36	4	4	7	n/a	n/a	n/a	n/a
		6	4	7	n/a	n/a	n/a	n/a

Face-Velocity Limits for Moisture Carryover

Cooling coils for the M-Series air handler are available with a wide variety of fin types and materials, including the following, to help optimize their performance:

- 1/2-inch: Delta-Flo™ E and Delta-Flo H aluminum fins
- 5/8-inch: Prima-Flo™ E and Prima-Flo H aluminum fins, and Prima-Flo™ copper fins

All of these fins are available with variable fin spacing (that is, the spacing can increment by as little as one fin per foot). Also, Delta-Flo H and Prima-Flo H fins are specifically designed to help maximize heat transfer while minimizing moisture carryover.

Figure 46 through Figure 49 detail the moisture carryover limits for each of these fin types. Refer to TOPSS selection program for availability.

Figure 46. Face-velocity limits for moisture carryover with uncoated coils in unit sizes 3 to 10

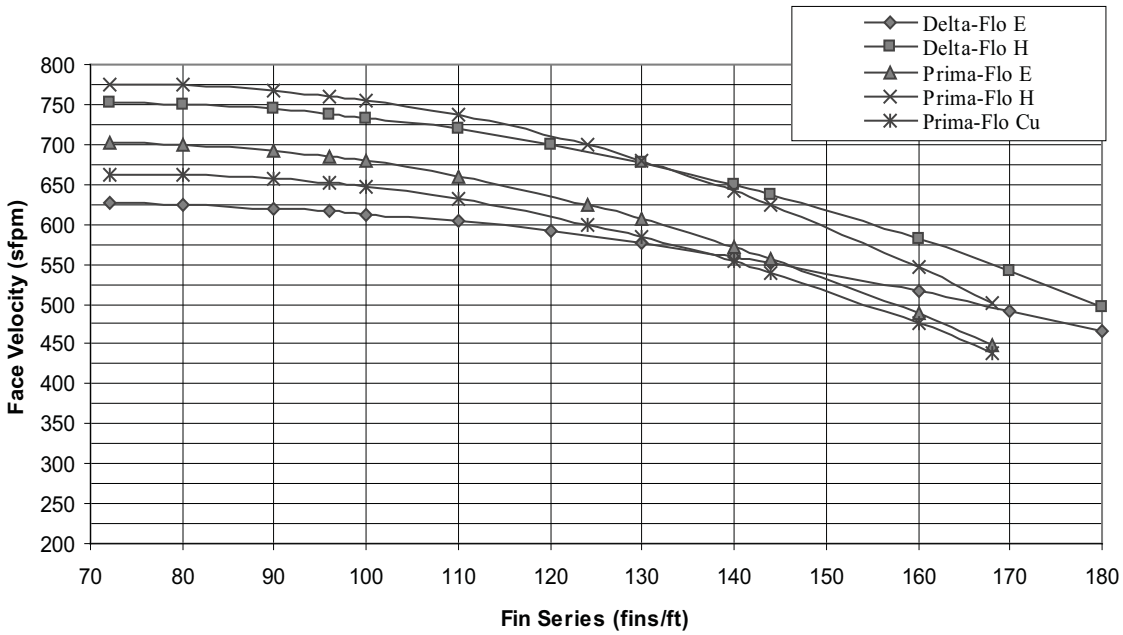

Figure 47. Face-velocity limits for moisture carryover with uncoated coils in unit size 12

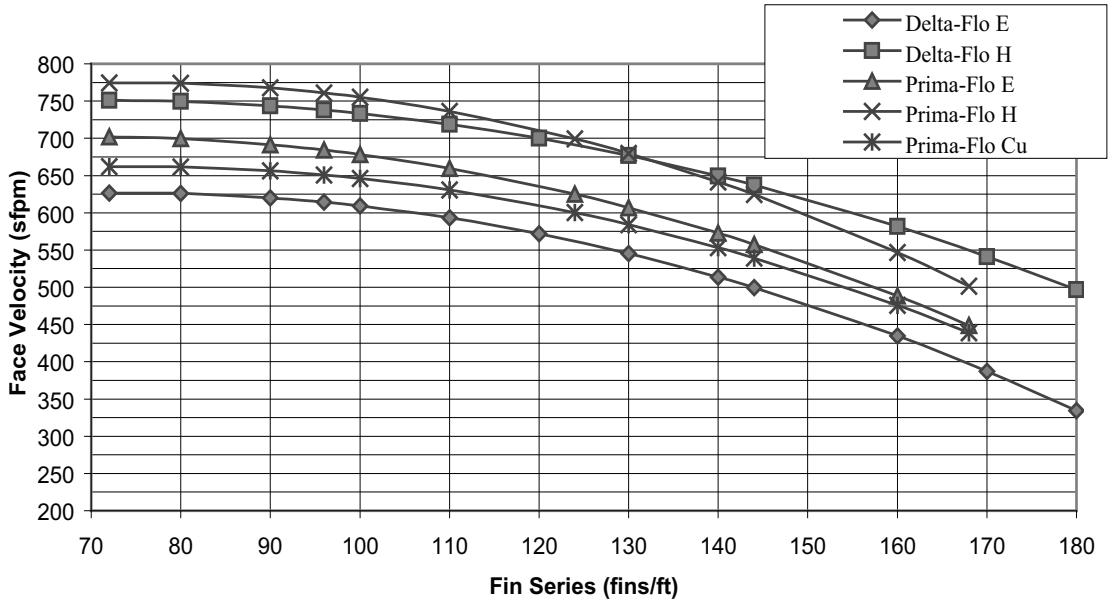

Figure 48. Face velocity limits for moisture carryover with uncoated coils in unit sizes 14 to 17

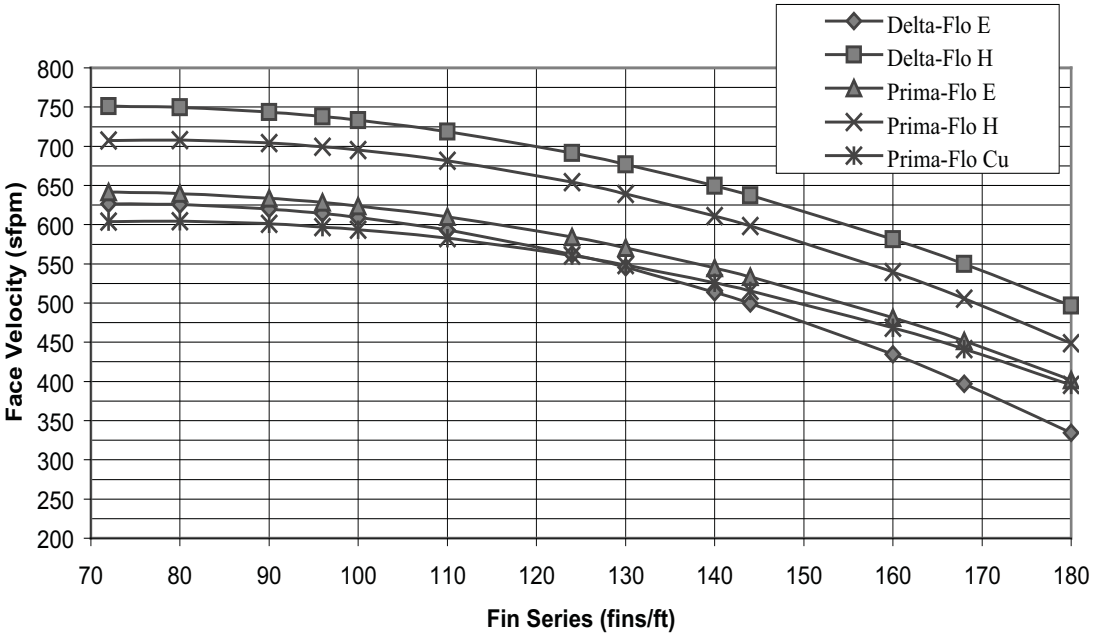

Figure 49. Face velocity limits for moisture carryover with uncoated coils in unit sizes 21 to 30

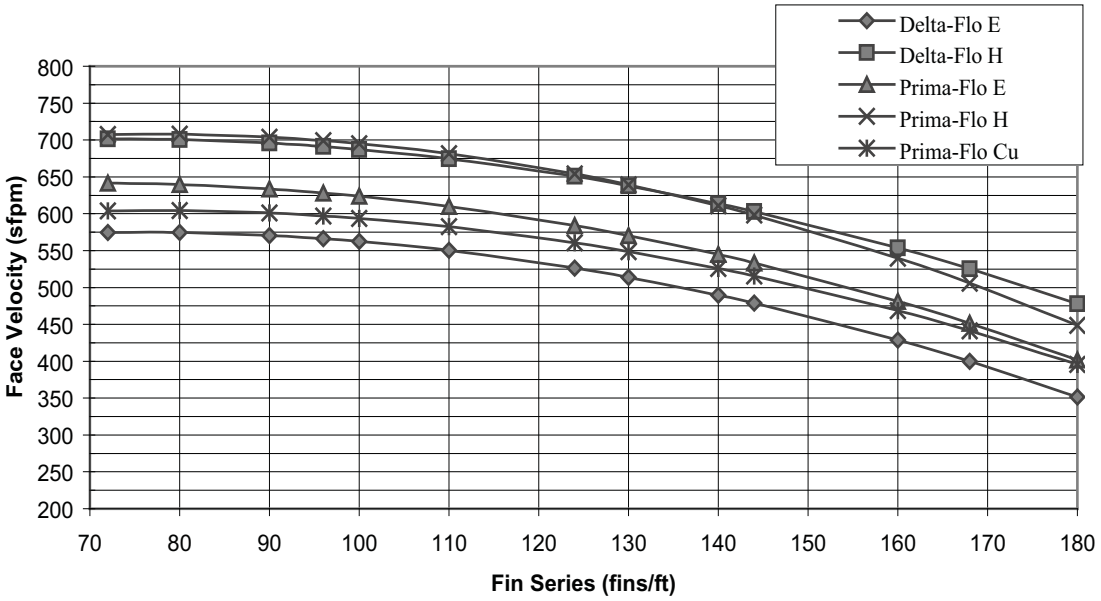

Performance Data

Diffuser

Table 92. Diffuser Area

Unit Size	3	4	6	8	10	12	14	17	21	25	30
Face Area3	1.89	1.89	4.17	4.17	4.17	4.17	4.17	8.26	8.26	10.18	10.14

Table 93. Diffuser Pressure Drop

	Static Pressure Drop (inches wg) by Face Velocity (fpm)								
Unit Size	500	700	900	1100	1300	1500	1700	1900	2100
3-30	0.01	0.02	0.04	0.06	0.08	0.10	0.13	0.17	0.20

Discharge Plenums

Horizontal or Vertical Discharge Plenum with Factory Openings

Figure 50. Horizontal plenum

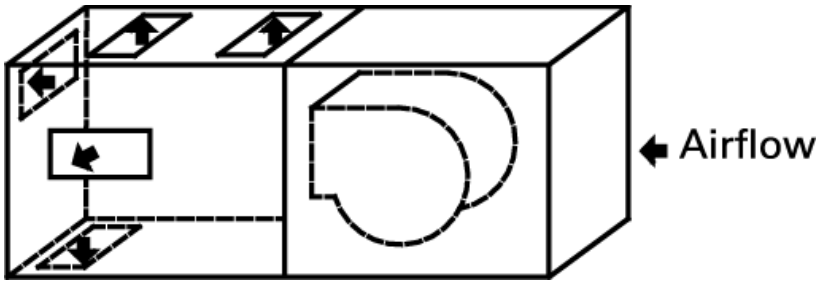

Figure 51. Vertical plenum

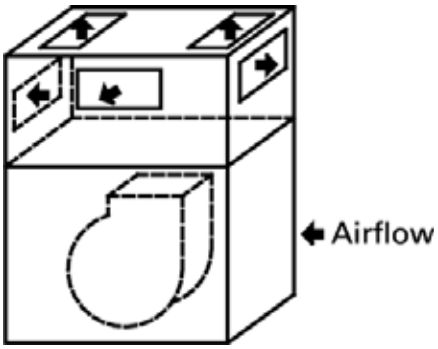

Table 94. Discharge plenums - default factory outlet areas (ft^2)

	Horizontal Plenum					Vertical Plenum		
	Rectangular Openings		Round Openings			Rectangular Openings		Round Openings
Unit Size	Front, top, bottom	Side	Front	Top, bottom	Side	Front, top, bottom	Side	Front, back, top, side
3	1.07	1.07	0.92	0.92	0.92	1.07	1.07	0.92
4	1.53	1.25	1.40	1.40	1.40	1.53	1.25	1.40
6	2.19	2.13	2.18	2.18	2.18	2.19	2.13	2.18
8	2.67	2.51	2.64	2.64	2.64	2.67	2.51	2.64
10	3.33	3.36	3.14	3.14	3.14	3.33	3.36	3.14
12	4.00	3.99	4.28	3.69	4.28	4.00	3.99	4.28
14	4.88	4.69	4.91	3.69	4.28	4.88	4.69	4.91
17	5.91	5.56	5.59	3.69	4.28	5.91	5.56	5.59
21	7.12	7.04	6.31	3.14	3.69	7.12	7.04	6.31
25	8.54	8.13	7.88	7.07	7.88	8.54	8.13	7.88
30	10.21	10.15	9.62	7.07	7.88	10.21	10.15	9.62

Note: (1) Openings can be varied in number, size, and location within the TOPSS Selection Software. (2) Bellmouth openings are available within the TOPSS Selection Software.

Formulas

For all plenum openings, use:

$$SP = K_t \bullet \left(\frac{OV_F}{4005}\right)^2 + 0.5 \bullet \left(\frac{OV_P}{4005}\right)^2$$

Where:

SP = static pressure drop

K_t = value from Table 95

$OV_F = FM/OA_F$

$OV_P = CFM/OA_P$

OV_F = fan outlet velocity

OA_F = fan outlet area (see "General Data," on page 62)

OV_P = plenum opening outlet velocity

OA_P = plenum opening area (see Table 95)

Table 95. Discharge Plenums - factory openings, K_t values

Unit Size and Fan Type	Plenum Discharge Location	Plenum Location - Top Mounted		Plenum Location - Horizontally Mounted	
		Supply Fan Discharge Top-front	Supply Fan Discharge Top-back	Supply Fan Discharge Front-top	Supply Fan Discharge Back-top
3-8 FC	Front-top	1.67	0.98	0.98	n/a
	Back-top	0.98	1.67	n/a	0.98
	Top-front/back	0.98	0.98	1.67	1.67
	Side-top	1.50	1.50	1.50	1.50
	Bottom-front/back or full bottom	n/a	n/a	0.98	0.98
3-8 BC or AF	Front-top	1.14	0.68	0.68	N/A
	Back-top	0.68	1.14	N/A	0.68
	Top-front/back	0.68	0.68	1.33	1.33
	Side-top	1.29	1.29	1.34	1.34
	Bottom-front/back or full bottom	n/a	n/a	0.78	0.78
10-17 FC	Front-top	2.59	1.68	1.68	n/a
	Back-top	1.68	2.59	n/a	1.68
	Top-front/back	1.68	1.68	2.59	2.59
	Side-top	2.37	2.37	2.37	2.37
	Bottom-front/back	n/a	n/a	1.28	1.28
10-17 AF	Front-top	1.67	1.15	1.15	n/a
	Back-top	1.15	1.67	n/a	1.15
	Top-front/back	1.15	1.15	1.83	1.83
	Side-top	1.85	1.85	1.85	1.85
	Bottom-front/back	n/a	n/a	1.23	1.23
21-30 FC	Front-top	1.68	0.96	0.96	n/a
	Back-top	0.96	1.68	n/a	0.96
	Top-front/back	0.96	0.96	1.68	1.68
	Side-top	1.50	1.50	1.50	1.50
	Bottom-front/back	n/a	n/a	0.96	0.96
21-30 AF	Front-top	1.45	0.93	0.93	n/a
	Back-top	0.93	1.45	n/a	0.93
	Top-front/back	0.93	0.93	1.81	1.81
	Side-top	1.68	1.68	1.68	1.68
	Bottom-front/back	n/a	n/a	1.13	1.13
3-30 P	Front-top	2.50	2.50	2.50	n/a
	Back-top	2.50	2.50	n/a	2.50
	Top-front/back	2.00	2.00	2.00	2.00
	Side-top	2.00	2.00	2.00	2.00
	Bottom-front/back	n/a	n/a	2.00	2.00

Note: AF = airfoil, FC = forward-curved, P = plenum fan.

Filters

Table 96. Filters - clean

Filter Type	Static Pressure Drop (inches wg) by Filter Face Velocity (fpm)								
	200	250	300	350	400	450	500	550	600
2-inch permanent – MERV 2	0.01	0.02	0.03	0.04	0.05	0.06	0.07	0.09	0.11
2-inch disposable (TA) – MERV 5	0.04	0.06	0.08	0.10	0.13	0.15	0.18	n/a	n/a
2-inch pleated media – MERV 8	0.08	0.11	0.14	0.18	0.22	0.26	0.30	0.34	0.39
2-inch pleated media – coated – MERV 7	0.08	0.11	0.14	0.18	0.21	0.26	0.30	0.35	0.40
4-inch pleated media – MERV 8	0.04	0.06	0.08	0.11	0.13	0.16	0.19	0.22	0.25
4-inch pleated media – coated – MERV 7	0.04	0.06	0.09	0.12	0.16	0.20	0.25	0.30	0.36
4-inch high efficient – 65% efficient – MERV 11	0.07	0.10	0.12	0.15	0.18	0.21	0.24	0.27	0.30
4-inch high efficient – 95% efficient – MERV 14	0.16	0.20	0.25	0.29	0.34	0.39	0.44	0.49	0.54
12-inch cartridge – 65% efficient – MERV 11	0.06	0.09	0.12	0.15	0.19	0.23	0.27	0.31	0.36
12-inch cartridge – 95% efficient – MERV 14	0.11	0.14	0.18	0.22	0.26	0.30	0.35	0.39	0.44
18-inch bag – 65% efficient – MERV 12	0.18	0.22	0.27	0.31	0.35	0.39	0.44	0.48	0.52
18-inch bag – 85% efficient – MERV 13	0.20	0.25	0.30	0.35	0.41	0.46	0.51	0.56	0.61
18-inch bag – 95% efficient – MERV 14	0.23	0.28	0.34	0.39	0.45	0.50	0.56	0.61	0.66
30-inch bag – 65% efficient – MERV 12	0.07	0.10	0.13	0.17	0.21	0.26	0.31	0.36	0.42
30-inch bag – 85% efficient – MERV 13	0.09	0.11	0.15	0.18	0.22	0.26	0.31	0.35	0.40
30-inch bag – 95% efficient – MERV 14	0.17	0.22	0.27	0.32	0.37	0.42	0.47	0.52	0.58

Table 97. Filters - mid-life

Filter Type	Static Pressure Drop (inches wg) by Filter Face Velocity (fpm)								
	200	250	300	350	400	450	500	550	600
2-inch permanent – MERV 2	0.51	0.51	0.52	0.52	0.53	0.53	0.54	0.55	0.55
2-inch disposable (TA) – MERV 5	0.52	0.53	0.54	0.55	0.57	0.58	0.59	n/a	n/a
2-inch pleated media – MERV 8	0.54	0.56	0.57	0.59	0.61	0.63	0.65	0.67	0.69
2-inch pleated media – coated – MERV 7	0.54	0.56	0.57	0.59	0.61	0.63	0.65	0.67	0.70
4-inch pleated media – MERV 8	0.52	0.53	0.54	0.56	0.57	0.58	0.59	0.61	0.62
4-inch pleated media – coated – MERV 7	0.52	0.53	0.55	0.57	0.59	0.61	0.63	0.65	0.67
4-inch high efficient – 65% efficient – MERV 11	0.64	0.65	0.66	0.68	0.69	0.70	0.72	0.73	0.75
4-inch high efficient – 95% efficient – MERV 14	0.68	0.70	0.72	0.75	0.77	0.79	0.82	0.84	0.87
12-inch cartridge – 65% efficient – MERV 11	0.63	0.65	0.66	0.68	0.70	0.72	0.74	0.76	0.78
12-inch cartridge – 95% efficient – MERV 14	0.65	0.67	0.69	0.71	0.73	0.75	0.77	0.80	0.82
18-inch bag – 65% efficient – MERV 12	0.69	0.71	0.73	0.75	0.77	0.80	0.82	0.84	0.86
18-inch bag – 85% efficient – MERV 13	0.70	0.73	0.75	0.78	0.80	0.83	0.85	0.88	0.90
18-inch bag – 95% efficient – MERV 14	0.71	0.74	0.77	0.80	0.82	0.85	0.88	0.90	0.93
30-inch bag – 65% efficient – MERV 12	0.63	0.65	0.67	0.69	0.71	0.73	0.76	0.78	0.80
30-inch bag – 85% efficient – MERV 13	0.64	0.66	0.68	0.70	0.71	0.73	0.76	0.78	0.80
30-inch bag – 95% efficient – MERV 14	0.69	0.71	0.73	0.76	0.78	0.81	0.83	0.86	0.89

Table 98. Filters - dirty

Filter Type	Static Pressure Drop (inches wg) by Filter Face Velocity (fpm)								
	200	250	300	350	400	450	500	550	600
2-inch permanent – MERV 2	1.00	1.00	1.00	1.00	1.00	1.00	1.00	1.00	1.00
2-inch disposable (TA) – MERV 5	1.00	1.00	1.00	1.00	1.00	1.00	1.00	n/a	n/a
2-inch pleated media – MERV 8	1.00	1.00	1.00	1.00	1.00	1.00	1.00	1.00	1.00
2-inch pleated media – coated – MERV 7	1.00	1.00	1.00	1.00	1.00	1.00	1.00	1.00	1.00
4-inch pleated media – MERV 8	1.00	1.00	1.00	1.00	1.00	1.00	1.00	1.00	1.00
4-inch pleated media – coated – MERV 7	1.00	1.00	1.00	1.00	1.00	1.00	1.00	1.00	1.00
4-inch high efficient – 65% efficient – MERV 11	1.20	1.20	1.20	1.20	1.20	1.20	1.20	1.20	1.20
4-inch high efficient – 95% efficient – MERV 14	1.20	1.20	1.20	1.20	1.20	1.20	1.20	1.20	1.20
12-inch cartridge – 65% efficient – MERV 11	1.20	1.20	1.20	1.20	1.20	1.20	1.20	1.20	1.20
12-inch cartridge – 95% efficient – MERV 14	1.20	1.20	1.20	1.20	1.20	1.20	1.20	1.20	1.20
18-inch bag – 65% efficient – MERV 12	1.20	1.20	1.20	1.20	1.20	1.20	1.20	1.20	1.20
18-inch bag – 85% efficient – MERV 13	1.20	1.20	1.20	1.20	1.20	1.20	1.20	1.20	1.20
18-inch bag – 95% efficient – MERV 14	1.20	1.20	1.20	1.20	1.20	1.20	1.20	1.20	1.20
30-inch bag – 65% efficient – MERV 12	1.20	1.20	1.20	1.20	1.20	1.20	1.20	1.20	1.20
30-inch bag – 85% efficient – MERV 13	1.20	1.20	1.20	1.20	1.20	1.20	1.20	1.20	1.20
30-inch bag – 95% efficient – MERV 14	1.20	1.20	1.20	1.20	1.20	1.20	1.20	1.20	1.20

Damper Torque Requirements

Table 99. Damper torque requirements (inch pound) at 1-inch w.g. air pressure drop

Unit Size	Mixing Box Dampers										
	Parallel airfoil damper only	Opposed airfoil damper only	Standard Traq damper only	Low-flow single Traq damper only	Low-flow econ Traq damper only	Parallel airfoil damper linked to parallel airfoil damper	Opposed airfoil damper linked to opposed airfoil damper	Standard Traq linked to airfoil damper	Standard Traq linked to standard Traq damper	Low-flow econ Traq linked to airfoil damper	Low-flow econ Traq linked to standard Traq damper
3	9.0	6.4	18.0	N/A	N/A	10.3	7.7	19.7	36.0	N/A	N/A
4	13.1	9.3	36.0	18.0	18.0	14.9	11.2	37.7	72.0	19.9	54.0
6	17.1	12.2	36.0	18.0	18.0	19.6	14.7	39.0	72.0	20.5	54.0
8	23.3	16.6	54.0	18.0	36.0	26.6	19.9	57.4	108.0	39.4	90.0
10	29.0	20.7	54.0	18.0	36.0	33.2	24.9	58.1	108.0	40.1	90.0
12	35.7	25.5	67.5	22.5	45.0	40.7	30.6	72.6	135.0	50.1	112.5
14	39.5	28.2	67.5	22.5	45.0	45.2	33.9	73.4	135.0	50.9	112.5
17	48.9	34.9	67.5	22.5	45.0	55.9	41.9	74.5	135.0	53.1	112.5
21	60.4	43.1	99.0	33.0	66.0	69.0	51.8	107.6	198.0	74.6	165.0
25	72.4	51.7	99.0	33.0	66.0	82.8	62.1	109.3	198.0	78.4	165.0
30	84.2	60.1	108.0	36.0	72.0	96.2	72.2	120.0	216.0	93.6	180.0

Mixing Box with Dampers

Table 100. Mixing box with front, back, top, and bottom airfoil blade dampers (unducted)

Unit Size	Face Area (ft^2)	Static Pressure Drop (inches wg) by Filter Face Velocity (fpm)										
		400	500	600	700	800	900	1000	1100	1200	1400	1600
3	1.29	0.05	0.07	0.11	0.14	0.19	0.24	0.29	0.36	0.42	0.58	0.75
4	1.87	0.04	0.06	0.09	0.13	0.16	0.21	0.26	0.31	0.37	0.50	0.66
6	2.45	0.04	0.06	0.09	0.12	0.15	0.20	0.24	0.29	0.35	0.47	0.62
8	3.33	0.04	0.06	0.08	0.11	0.15	0.19	0.23	0.28	0.33	0.45	0.58
10	4.16	0.04	0.06	0.08	0.11	0.14	0.18	0.22	0.27	0.32	0.43	0.57
12	5.10	0.03	0.05	0.08	0.11	0.14	0.18	0.22	0.26	0.31	0.43	0.56
14	5.66	0.03	0.05	0.07	0.10	0.12	0.16	0.19	0.24	0.28	0.38	0.50
17	6.99	0.03	0.05	0.07	0.09	0.12	0.15	0.19	0.23	0.27	0.37	0.49
21	8.64	0.03	0.05	0.07	0.09	0.12	0.15	0.19	0.23	0.27	0.37	0.48
25	10.36	0.03	0.04	0.06	0.09	0.11	0.14	0.17	0.21	0.25	0.34	0.45
30	12.04	0.03	0.04	0.06	0.08	0.11	0.14	0.17	0.21	0.25	0.34	0.44

Table 101. Mixing box with front, back, top, and bottom airfoil blade dampers (ducted)

Unit Size	Face Area (ft^2)	Static Pressure Drop (inches wg) by Filter Face Velocity (fpm)										
		400	500	600	700	800	900	1000	1100	1200	1400	1600
3	1.29	0.07	0.10	0.15	0.20	0.26	0.33	0.41	0.49	0.59	0.80	1.04
4	1.87	0.05	0.07	0.11	0.15	0.19	0.24	0.30	0.36	0.43	0.59	0.77
6	2.45	0.04	0.06	0.09	0.12	0.16	0.20	0.25	0.30	0.36	0.49	0.64
8	3.33	0.03	0.05	0.08	0.10	0.14	0.17	0.21	0.26	0.31	0.42	0.55
10	4.16	0.03	0.05	0.07	0.10	0.12	0.16	0.19	0.24	0.28	0.38	0.50
12	5.10	0.03	0.05	0.07	0.09	0.12	0.15	0.18	0.22	0.26	0.36	0.46
14	5.66	0.02	0.03	0.05	0.06	0.08	0.10	0.13	0.16	0.19	0.25	0.33
17	6.99	0.02	0.03	0.04	0.06	0.08	0.10	0.12	0.14	0.17	0.23	0.30
21	8.64	0.02	0.03	0.04	0.05	0.07	0.09	0.11	0.13	0.16	0.21	0.28
25	10.36	0.01	0.02	0.03	0.04	0.05	0.07	0.08	0.10	0.12	0.16	0.21
30	12.04	0.01	0.02	0.03	0.04	0.05	0.06	0.08	0.10	0.11	0.15	0.20

Table 102. Mixing box with Traq dampers

Unit Size	Damper Size (in)	Quantity	Area (sq ft)	Traq Damper Velocity (FPM) vs. Delta P (in H_2O) 800	900	1000	1100	1200	1300	1400	1500	1600
3	13	1	0.92	0.06	0.07	0.09	0.11	0.13	0.15	0.17	0.20	0.23
4	13	2	1.84	0.06	0.07	0.09	0.11	0.13	0.15	0.17	0.20	0.23
6	13	2	1.84	0.06	0.07	0.09	0.11	0.13	0.15	0.17	0.20	0.23
8	13	3	2.76	0.06	0.07	0.09	0.11	0.13	0.15	0.17	0.20	0.23
10	13	3	2.76	0.06	0.07	0.09	0.11	0.13	0.15	0.17	0.20	0.23
12	16	3	4.19	0.06	0.07	0.09	0.11	0.13	0.15	0.17	0.20	0.23
14	16	3	4.19	0.06	0.07	0.09	0.11	0.13	0.15	0.17	0.20	0.23
17	16	3	4.19	0.06	0.07	0.09	0.11	0.13	0.15	0.17	0.20	0.23
21	20	3	6.54	0.06	0.07	0.09	0.10	0.12	0.14	0.17	0.19	0.21
25	20	3	6.54	0.06	0.07	0.09	0.10	0.12	0.14	0.17	0.19	0.21
30	24	3	9.42	0.06	0.07	0.09	0.10	0.12	0.14	0.17	0.19	0.21

Unit Size	Damper Size (in)	Quantity	Area (sq ft)	Traq Damper Velocity (FPM) vs. Delta P (in H_2O) 1700	1800	1900	2000	2100	2200	2300	2400	2500
3	13	1	0.92	0.26	0.29	0.32	0.35	0.39	0.43	0.47	0.51	0.56
4	13	2	1.84	0.26	0.29	0.32	0.35	0.39	0.43	0.47	0.51	0.56
6	13	2	1.84	0.26	0.29	0.32	0.35	0.39	0.43	0.47	0.51	0.56
8	13	3	2.76	0.26	0.29	0.32	0.35	0.39	0.43	0.47	0.51	0.56
10	13	3	2.76	0.26	0.29	0.32	0.35	0.39	0.43	0.47	0.51	0.56
12	16	3	4.19	0.26	0.29	0.32	0.35	0.39	0.43	0.47	0.51	0.56
14	16	3	4.19	0.26	0.29	0.32	0.35	0.39	0.43	0.47	0.51	0.56
17	16	3	4.19	0.26	0.29	0.32	0.35	0.39	0.43	0.47	0.51	0.56
21	20	3	6.54	0.24	0.27	0.30	0.33	0.37	0.40	0.44	0.48	0.52
25	20	3	6.54	0.24	0.27	0.30	0.33	0.37	0.40	0.44	0.48	0.52
30	24	3	9.42	0.24	0.27	0.30	0.33	0.37	0.40	0.44	0.48	0.52

Notes: 1. Data a standard air density. 2. Traq damper airflow measurement station (AMS) ratings are based on AMCA Standard 610 Test Setup Figure 4 using differential pressure measurement with voltage signals from a Trane ventilation control module (VCM). 3. Performance of Traq dampers will be +/- 5 percent of data shown for AMCA 610 Test Setup Figure 4. 4. Sizes and shapes tested include 16-inch and 28-inch diameter circular. Rated sizes are from 13 inches to 24 inches diameter circular.5. Low-flow Traq option includes one damper for minimum outside air and remaining dampers are for economizing.

.

Trane certifies that the Traq damper shown herein is licensed to bear the AMCA seal - Airflow Measurement Station Performance. The rating shown is based on tests and procedures performed in accordance with AMCA Publication 611 and complies with the requirements of the AMCA Certified Ratings Program.

AMCA 610 Test Performance for Traq Damper

Table 103. Air Performance

Test Run	Reference Volume (cfm)	Indicated Volume (cfm)	Difference (percent)
Traq 16-inch damper AMS			
1	3470	3351	-3.41
2	2882	2773	-3.80
3	2264	2211	-2.35
4	1703	1676	-1.62
5	1032	1019	-1.25
6	506	505	-0.18
Traq 28-inch damper AMS			
1	10714	10548	-1.55
2	8817	8644	-1.96
3	6997	6851	-2.09
4	5063	4961	-2.00
5	3126	3071	-1.76
6	1363	1362	-0.06

Table 104. Airflow Resistance

Test Run	Pressure Drop (in. w.g.)	Volume (cfm)	Velocity (fpm)
Traq 16-inch damper AMS			
1	0.561	3469.70	2485.40
2	0.389	2895.70	2074.30
3	0.239	2276.30	1630.60
4	0.135	1710.20	1225.10
5	0.052	1035.00	741.40
6	0.010	507.00	363.20
Traq 28-inch damper AMS			
1	0.515	10738.60	2511.40
2	0.352	8856.50	2071.20
3	0.228	7029.20	1643.90
4	0.114	5085.50	1189.30
5	0.041	3134.60	733.10
6	0.010	1364.40	319.10

Corresponding conversion formulas:

Traq 16-inch AMS: Airflow =((Volts-2)/8)*2475*Total Area (applicable for unit sizes 3-17).

Traq 28-inch AMS: Airflow=((Volts-2)/8)*2600*Total Area (applicable for units sizes 21-30).

Refer to the Performance Climate Changer air handler installation operation manual (CLCH-SVX07A-EN) for Traq damper installation details.

Dimensions and Weights

Service Clearances

Figure 52. Service Clearances

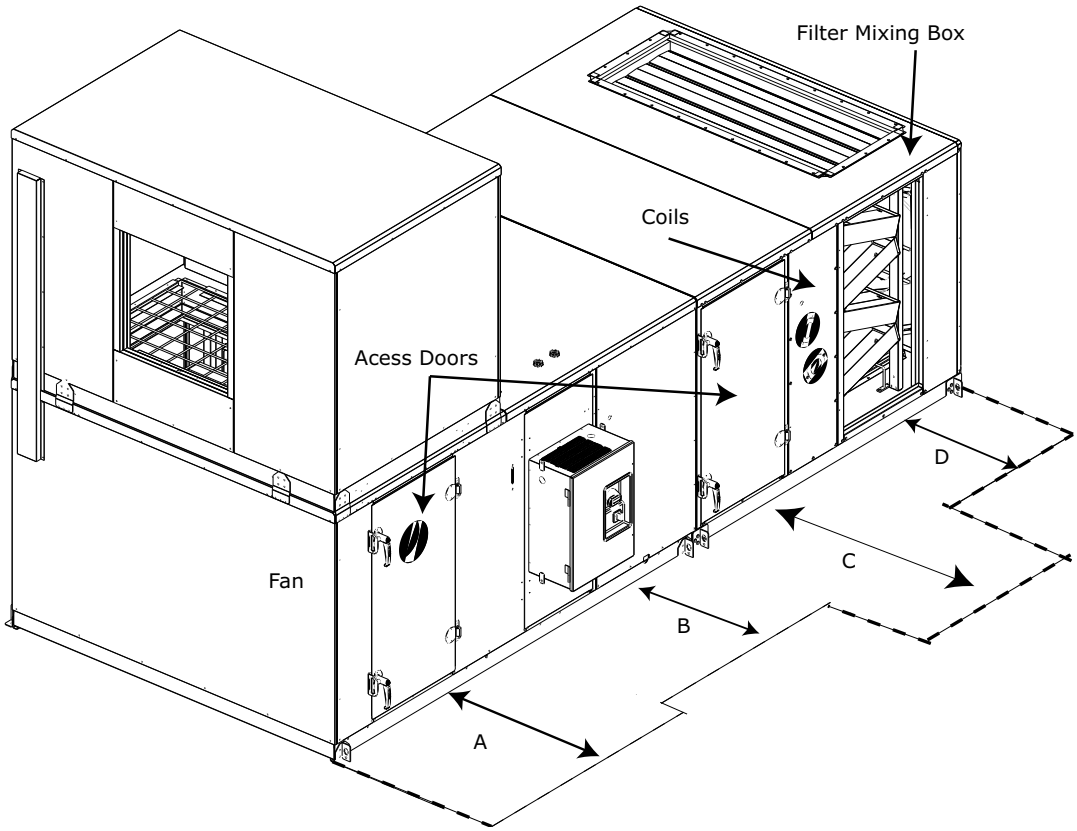

Table 105.Service clearances (inches)

Clearance Items	3	4	6	8	10	12	14	17	21	25	30
A (fan)	48	48	48	48	51	54	58	61	60	66	66
B (external starter of VFD)	72	78	78	78	78	78	78	78	83	83	83
B (internal starter or VFD)	60	60	60	60	60	60	60	60	60	60	60
C (coil)	48	59	59	66	77	82	87	87	95	95	109
D (filter)	48	48	48	48	48	48	48	48	48	48	48

Note: At a minimum, the above clearance dimensions are recommended on one side of the unit for regular service and maintenance. Refer to as-built submittal for locations of items such as filter access doors, coil, piping connections, motor locations, etc. Sufficient clearance must be provided on all sides of unit for removal of panels or section-to-section attachment brackets. Clearance for starters, VFDs, or other high-voltage devices must be provided per NEC requirements.

Note: For specific dimensional and weight information, refer to the unit submittals. The dimensions and weights in this manual are approximate. Trane has a policy of continuous product and product data improvement and reserves the right to change design and specifications without notice.

Access/Turning Section

Figure 53. Access/Turning section

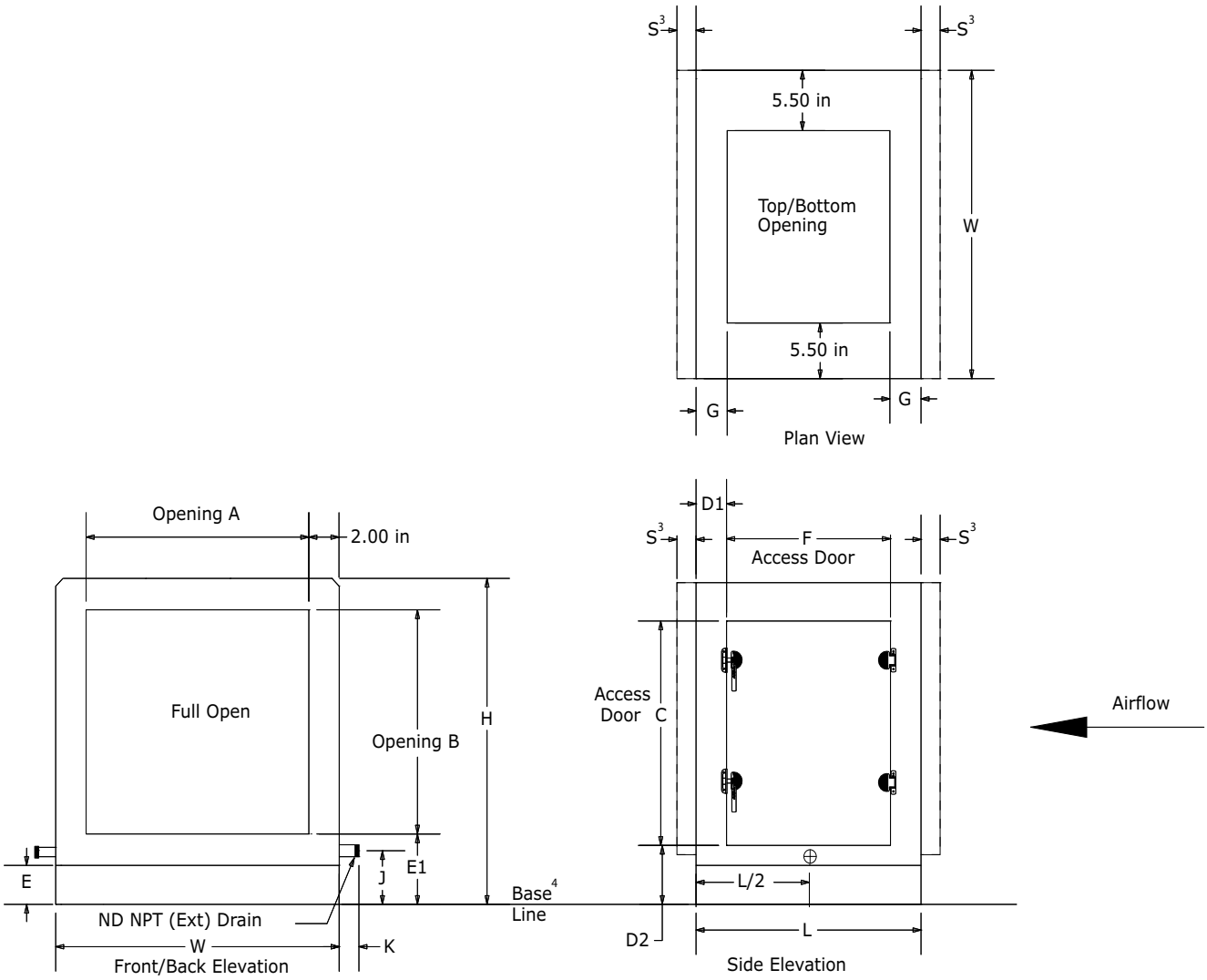

Table 106. Access/Turning section dimensions

Unit Size	W	H	Front/Back Opening A	Front/Back Opening B	Inward Door[4] Hinge[1]	Inward Door[4] C	Inward Door[4] D2	Outward Door[5] Hinge[1]	Outward Door[5] C	Outward Door[5] D2	Base E	Base E1	Drain Pan[2] J	Drain Pan[2] K	Drain Pan[2] ND	Ship Split Overlap S[3]
3	31.50	29.00	27.50	22.50	AL	19.38	5.38	AE	22.25	4.25	2.50	4.50	3.38	2.63	1.00	1.00
4	44.00	29.00	40.00	22.50	AL	19.38	5.38	AE	22.25	4.25	2.50	4.50	3.38	2.63	1.00	1.00
6	44.00	35.25	40.00	28.75	AL	25.63	5.38	AE	28.50	4.25	2.50	4.50	3.38	2.63	1.00	1.00
8	50.50	37.75	46.50	31.25	AL	28.13	5.38	AE	31.00	4.25	2.50	4.50	3.38	2.63	1.00	1.00
10	61.50	37.75	57.50	31.25	AL	28.13	5.38	AE	31.00	4.25	2.50	4.50	3.38	2.63	1.00	1.00
12	66.50	41.50	62.50	35.00	AL	31.88	5.38	AE	34.75	4.25	2.50	4.50	3.38	2.63	1.00	1.00
14	72.00	41.50	68.00	35.00	AL	31.88	5.38	AE	34.75	4.25	2.50	4.50	3.38	2.63	1.00	1.00
17	72.00	49.00	68.00	42.50	AL	39.38	5.38	AE	42.25	4.25	2.50	4.50	3.38	2.63	1.00	1.00
21	80.00	52.75	76.00	46.25	AL	43.13	5.38	AE	46.00	4.25	2.50	4.50	3.38	2.63	1.00	1.00
25	80.00	61.50	76.00	55.00	AL	51.88	5.38	AE	54.75	4.25	2.50	4.50	3.38	2.63	1.00	1.00
30	93.50	61.50	89.50	55.00	AL	51.88	5.38	AE	54.75	4.25	2.50	4.50	3.38	2.63	1.00	1.00

Unit Size	Small L	Small Inward Door[4] C	Small Inward Door[4] D1	Small Outward Door[5] F	Small Outward Door[5] D1	Medium L	Medium Inward Door[4] F	Medium Inward Door[4] D1	Medium Outward Door[5] F	Medium Outward Door[5] D1	Extended Medium L	Extended Medium Inward Door[4] F	Extended Medium Inward Door[4] D1	Extended Medium Outward Door[5] F	Extended Medium Outward Door[5] D1
3	10.00	No Door				14.00	N/A		9.88	2.13	19.00	12.13	3.50	14.88	2.13
4	10.00	No Door				14.00	N/A		9.88	2.13	19.00	12.13	3.50	14.88	2.13
6	10.00	No Door				14.00	N/A		9.88	2.13	19.00	12.13	3.50	14.88	2.13
8	10.00	No Door				14.00	N/A		9.88	2.13	19.00	12.13	3.50	14.88	2.13
10	10.00	No Door				14.00	N/A		9.88	2.13	19.00	12.13	3.50	14.88	2.13
12	10.00	No Door				14.00	N/A		9.88	2.13	19.00	12.13	3.50	14.88	2.13
14	10.00	No Door				14.00	N/A		9.88	2.13	19.00	12.13	3.50	14.88	2.13
17	10.00	No Door				14.00	N/A		9.88	2.13	19.00	12.13	3.50	14.88	2.13
21	10.00	No Door				14.00	N/A		9.88	2.13	19.00	12.13	3.50	14.88	2.13
25	10.00	No Door				14.00	N/A		9.88	2.13	19.00	12.13	3.50	14.88	2.13
30	10.00	No Door				14.00	N/A		9.88	2.13	19.00	12.13	3.50	14.88	2.13

Unit Size	Medium Large L	Medium Large Inward Door[4] F	Medium Large Inward Door[4] D1	Medium Large Outward Door[5] F	Medium Large Outward Door[5] D1	Large L	Large Inward Door[4] F	Large Inward Door[4] D1	Large Outward Door[5] F	Large Outward Door[5] D1	Large Turning G	Extra Large L	Extra Large Inward Door[4] F	Extra Large Inward Door[4] D1	Extra Large Outward Door[5] F	Extra Large Outward Door[5] D1	Extra Large Turning G
3	24.50	17.63	3.50	20.38	2.13	34.00	16.00	9.00	18.75	7.63	4.13	36.00	17.63	9.25	20.38	7.88	4.13
4	24.50	17.63	3.50	20.38	2.13	34.00	16.00	9.00	18.75	7.63	4.13	41.00	17.63	11.75	20.38	10.38	4.13
6	24.50	17.63	3.50	20.38	2.13	34.00	16.00	9.00	18.75	7.63	4.13	41.00	17.63	11.75	20.38	10.38	4.13
8	26.50	19.63	3.50	22.38	2.13	36.00	16.00	10.00	18.75	8.63	4.13	44.00	19.63	12.25	22.38	10.88	4.13
10	26.50	19.63	3.50	22.38	2.13	36.00	16.00	10.00	18.75	8.63	4.13	42.50	19.63	11.50	22.38	10.13	4.13
12	26.50	19.63	3.50	22.38	2.13	36.00	16.00	10.00	18.75	8.63	4.13	42.50	19.63	11.50	22.38	10.13	4.13
14	26.50	19.63	3.50	22.38	2.13	36.00	16.00	10.00	18.75	8.63	4.13	42.50	19.63	11.50	22.38	10.13	4.13
17	24.50	17.63	3.50	20.38	2.13	36.00	17.63	9.25	20.38	7.88	4.13	44.00	17.63	13.25	20.38	11.88	4.13
21	24.50	17.63	3.50	20.38	2.13	34.00	16.00	9.00	18.75	7.63	4.13	50.25	17.63	16.38	20.38	15.00	4.13
25	24.50	17.63	3.50	20.38	2.13	46.00	17.63	14.25	20.38	12.88	4.13	56.50	17.63	19.50	20.38	18.13	4.13
30	24.50	17.63	3.50	20.38	2.13	46.00	17.63	14.25	20.38	12.88	4.13	56.50	17.63	19.50	20.38	18.13	4.13

Note: [1]Hinged on air-entering (AE) side or air-leaving (AL) side. [2]Drain pan connection dimension is nominal pipe size. IAQ drain pain connections can be either LH or RH, but not both. [3] Shipping split flange dimension is for shipping planning purposes only and does not add to installed overall unit length. [4] Inward swing doors are dimensioned to door opening. [5] Outward swing door opening is (F-2.73)by(C-1.80). [6] Base line includes the height for standard 2.5-inch integral base frame.

Coils

Coil Section

Figure 54. Coil section

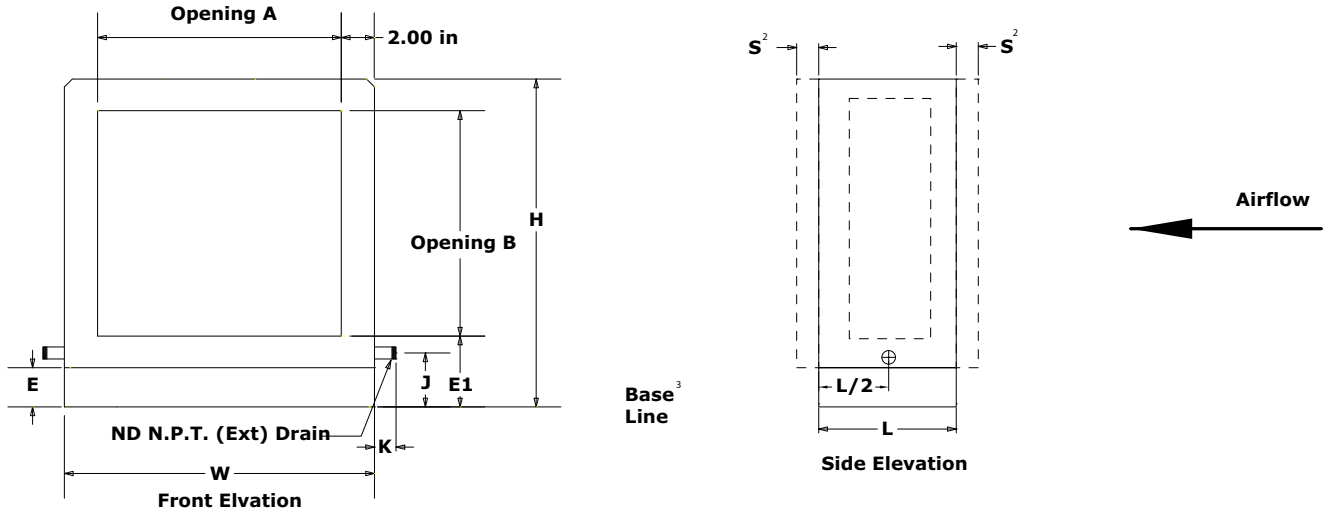

Table 107. Coil section dimensions (inches)

Unit Size	W	H	Front/Back Opening A	Front/Back Opening B	Base E	Base E1	Drain Pan[1] J	Drain Pan[1] K	Drain Pan[1] ND	Small L	Med L	Ext Med L	Med Lrg L	Lrg L	S[2]
3	31.50	29.00	27.50	22.50	2.50	4.50	3.38	2.63	1.00	10.00	14.00	19.00	24.50	34.00	1.00
4	44.00	29.00	40.00	22.50	2.50	4.50	3.38	2.63	1.00	10.00	14.00	19.00	24.50	34.00	1.00
6	44.00	35.25	40.00	28.75	2.50	4.50	3.38	2.63	1.00	10.00	14.00	19.00	24.50	34.00	1.00
8	50.50	37.75	46.50	31.25	2.50	4.50	3.38	2.63	1.00	10.00	14.00	19.00	26.50	36.00	1.00
10	61.50	37.75	57.50	31.25	2.50	4.50	3.38	2.63	1.00	10.00	14.00	19.00	26.50	36.00	1.00
12	66.50	41.50	62.50	35.00	2.50	4.50	3.38	2.63	1.00	10.00	14.00	19.00	26.50	36.00	1.00
14	72.00	41.50	68.00	35.00	2.50	4.50	3.38	2.63	1.00	10.00	14.00	19.00	26.50	36.00	1.00
17	72.00	49.00	68.00	42.50	2.50	4.50	3.38	2.63	1.00	10.00	14.00	19.00	24.50	36.00	1.00
21	80.00	52.75	76.00	46.25	2.50	4.50	3.38	2.63	1.00	10.00	14.00	19.00	24.50	34.00	1.00
25	80.00	61.50	76.00	55.00	2.50	4.50	3.38	2.63	1.00	10.00	14.00	19.00	24.50	46.00	1.00
30	93.50	61.50	89.50	55.00	2.50	4.50	3.38	2.63	1.00	10.00	14.00	19.00	24.50	46.00	1.00

Note: **1** Drain pan connection dimension is nominal pipe size. IAQ drain pain connections can be either LH or RH but not both. **2** Shipping split flange dimension is for shipping and insulation planning purposes only and does not add to installed overall unit length. **3** Base line includes the height for standard 2.5-inch integral base frame.

Coil Section with Inspection Door

Figure 55. Horizontal Coil section with inspection door

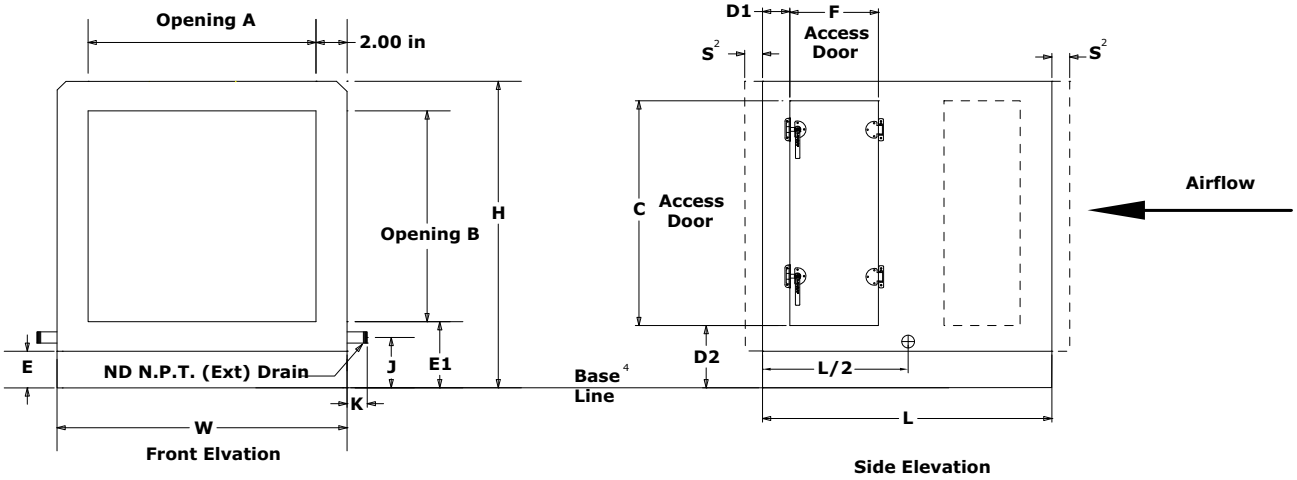

Table 108. Coil section with Access door dimensions (inches)

Unit Size	W	H	Med Lrg L	Lrg L	Front / Back Opening A	Front / Back Opening B	Base E	Base E1	Drain Pan[1] J	Drain Pan[1] K	Drain Pan[1] ND	Door[3] Med Lrg D1	Door[3] Lrg D1	Door[3] D2	Door[3] C	Door[3] Med Lrg F	Door[3] Lrg F	S[2]
3	31.50	29.00	24.50	34.00	27.50	22.50	2.50	4.50	3.38	2.63	1.00	2.13	2.13	4.25	22.25	9.88	14.88	1.00
4	44.00	29.00	24.50	34.00	40.00	22.50	2.50	4.50	3.38	2.63	1.00	2.13	2.13	4.25	22.25	9.88	14.88	1.00
6	44.00	35.25	24.50	34.00	40.00	28.75	2.50	4.50	3.38	2.63	1.00	2.13	2.13	4.25	28.50	9.88	14.88	1.00
8	50.50	37.75	26.50	36.00	46.50	31.25	2.50	4.50	3.38	2.63	1.00	2.13	2.13	4.25	31.00	9.88	14.88	1.00
10	61.50	37.75	26.50	36.00	57.50	31.25	2.50	4.50	3.38	2.63	1.00	2.13	2.13	4.25	31.00	9.88	14.88	1.00
12	66.50	41.50	26.50	36.00	62.50	35.00	2.50	4.50	3.38	2.63	1.00	2.13	2.13	4.25	34.75	9.88	14.88	1.00
14	72.00	41.50	26.50	36.00	68.00	35.00	2.50	4.50	3.38	2.63	1.00	2.13	2.13	4.25	34.75	9.88	14.88	1.00
17	72.00	49.00	24.50	36.00	68.00	42.50	2.50	4.50	3.38	2.63	1.00	2.13	2.13	4.25	42.25	9.88	14.88	1.00
21	80.00	52.75	24.50	34.00	76.00	46.25	2.50	4.50	3.38	2.63	1.00	2.13	2.13	4.25	46.00	9.88	14.88	1.00
25	80.00	61.50	24.50	46.00	76.00	55.00	2.50	4.50	3.38	2.63	1.00	2.13	2.13	4.25	54.75	9.88	14.88	1.00
30	93.50	61.50	24.50	46.00	89.50	55.00	2.50	4.50	3.38	2.63	1.00	2.13	2.13	4.25	54.75	9.88	14.88	1.00

Note: [1]Drain pan connection dimension is nominal pipe size. IAQ drain pain connections can be either LH or RH, but not both. [2] Shipping split flange dimension is for shipping planning purposes only and does not add to installed overall unit length. [3] Outward swing door opening is (F-2.73)by(C-1.80). [4]Base line includes the height for standard 2.5-inch integral base frame.

Vertical Coil section

Figure 56. Vertical Coil section with inspection door

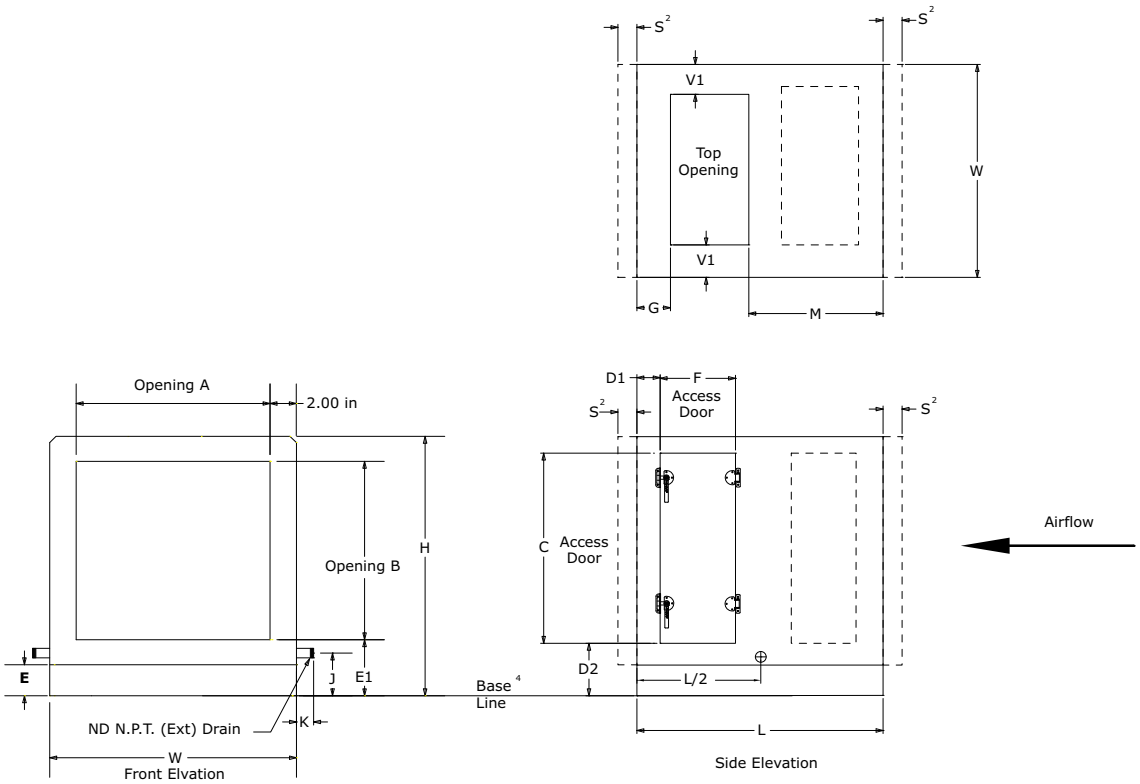

Table 109. Vertical Coil section dimensions

Unit Size	W	H	L	Front / Back Opening A	Front / Back Opening B	Top Opening V1	Top Opening G	Top Opening M	Base E	Base E1	Drain Pan[1] J	Drain Pan[1] K	Drain Pan[1] ND	Door[3] D1	Door[3] D2	Door[3] C	Door[3] F	S[2]
3	31.50	29.00	34.00	27.50	22.50	8.00	4.13	13.00	2.50	4.50	3.38	2.63	1.00	3.25	4.25	22.25	14.88	1.00
4	44.00	29.00	34.00	40.00	22.50	8.00	4.13	13.00	2.50	4.50	3.38	2.63	1.00	3.25	4.25	22.25	14.88	1.00
6	44.00	35.25	34.00	40.00	28.75	8.00	4.13	13.00	2.50	4.50	3.38	2.63	1.00	3.25	4.25	28.50	14.88	1.00
8	50.50	37.75	36.00	46.50	31.25	8.00	4.13	13.00	2.50	4.50	3.38	2.63	1.00	3.25	4.25	31.00	14.88	1.00
10	61.50	37.75	36.00	57.50	31.25	9.00	4.13	13.00	2.50	4.50	3.38	2.63	1.00	3.25	4.25	31.00	14.88	1.00
12	66.50	41.50	36.00	62.50	35.00	9.00	4.13	13.00	2.50	4.50	3.38	2.63	1.00	3.25	4.25	34.75	14.88	1.00
14	72.00	41.50	36.00	68.00	35.00	9.00	4.13	13.00	2.50	4.50	3.38	2.63	1.00	3.25	4.25	34.75	14.88	1.00
17	72.00	49.00	36.00	68.00	42.50	9.00	4.13	13.00	2.50	4.50	3.38	2.63	1.00	3.25	4.25	42.25	14.88	1.00
21	80.00	52.75	34.00	76.00	46.25	9.00	4.13	13.00	2.50	4.50	3.38	2.63	1.00	3.25	4.25	46.00	14.88	1.00
25	80.00	61.50	46.00	76.00	55.00	9.00	4.13	13.00	2.50	4.50	3.38	2.63	1.00	3.25	4.25	54.75	14.88	1.00
30	93.50	61.50	46.00	89.50	55.00	9.00	4.13	13.00	2.50	4.50	3.38	2.63	1.00	3.25	4.25	54.75	14.88	1.00

Note: [1]Drain pan connection dimension is nominal pipe size. IAQ drain pain connections can be either LH or RH, but not both. [2] Shipping split flange dimension is for shipping planning purposes only and does not add to installed overall unit length. [3] Outward swing door opening is (F-2.73)by(C-1.80). [4]Base line includes the height for standard 2.5-inch integral base frame.

Coil Locations

Figure 57. Coil locations

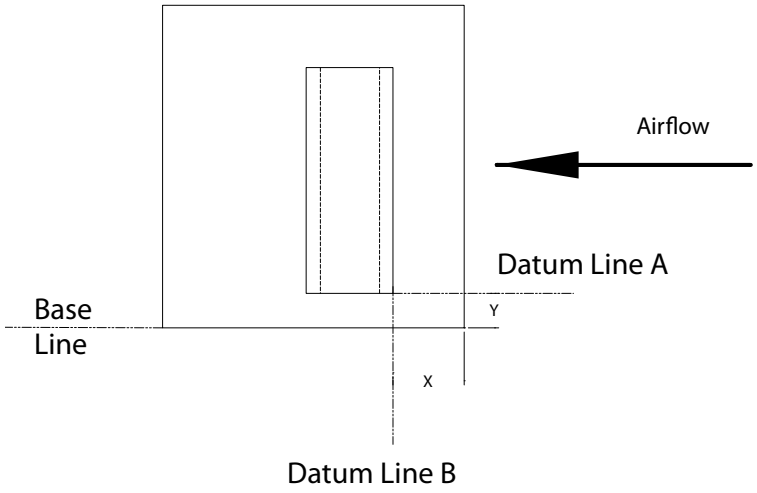

Table 110. Coil location dimensions

	1/2-inch, 5/8-inch and 1-inch Coils	
Unit Size	**X**	**Y**
3 - 12	1.63	4.75
14 - 17	1.63	4.75
21 - 30	1.63	4.88

Note: 1. Base line includes the height for standard 2.5-inch integral base frame. 2. For coil connection information for refrigerant coils, refer to submittal. 3. For specific dimensional information for all coils, refer to the unit submittals provided from the Trane Official Product Selection Software (TOPSS).

Coil Connection Locations

Figure 58. Coil connection locations

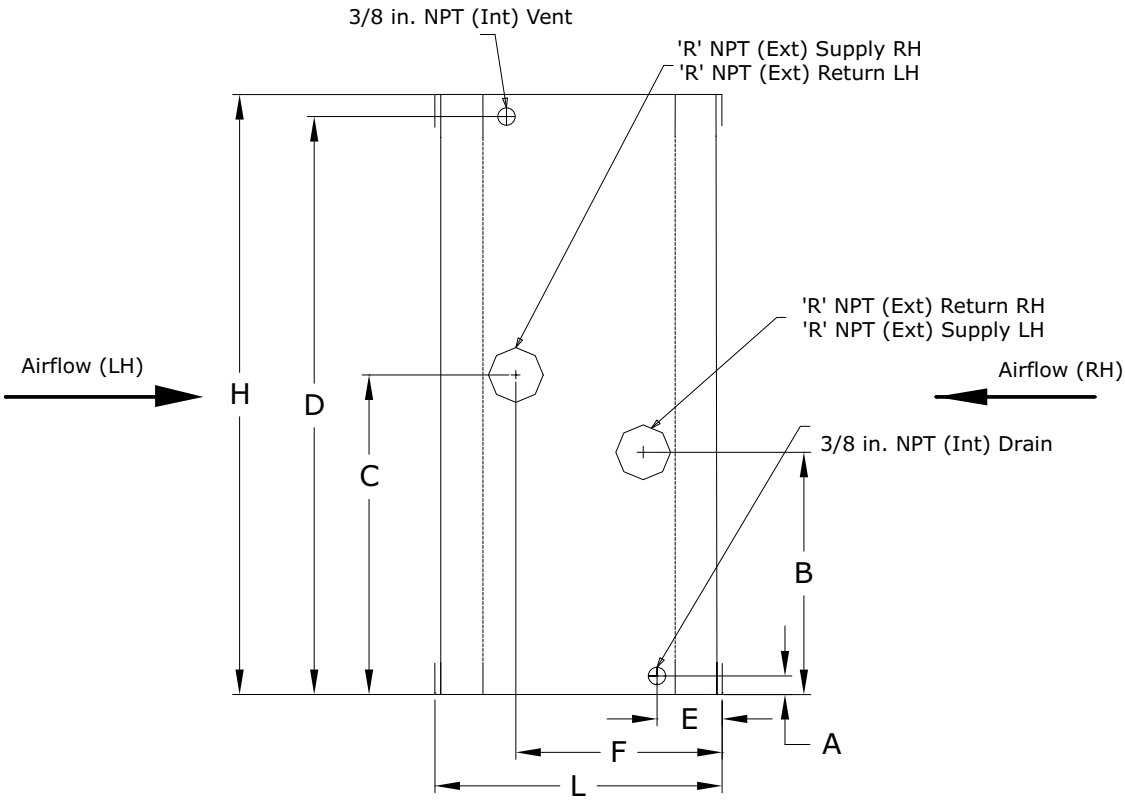

Table 111. UW Coil Connection Locations

Unit Size	2 - 8 Row A	B	C	D	H	R	2 Row 4-8 Row E		2 Row 4 Row 6 Row 8 Row F				2 Row 4 Row 6 Row 8 Row L			
3	1.13	8.63	11.75	19.25	20.25	1.50	1.38	1.75	3.25	5.00	7.13	9.25	4.63	6.75	8.88	11.00
4	1.13	8.63	11.75	19.25	20.25	1.50	1.38	1.75	3.25	5.00	7.13	9.25	4.63	6.75	8.88	11.00
6	1.13	11.75	14.88	25.50	26.50	1.50	1.38	1.75	3.25	5.00	7.13	9.25	4.63	6.75	8.88	11.00
8	1.13	13.00	16.13	28.00	29.00	2.00	1.13	1.75	3.50	5.00	7.13	9.25	4.63	6.75	8.88	11.00
10	1.13	13.00	16.13	28.00	29.00	2.00	1.13	1.75	3.50	5.00	7.13	9.25	4.63	6.75	8.88	11.00
12	1.13	14.88	18.00	31.75	32.75	2.00	1.13	1.75	3.50	5.00	7.13	9.25	4.63	6.75	8.88	11.00
14	1.13	14.88	18.00	31.75	32.75	2.00	1.13	1.75	3.50	5.00	7.13	9.25	4.63	6.75	8.88	11.00
17	1.13	18.63	21.75	39.25	40.25	2.50	0.88	1.75	3.75	5.00	7.13	9.25	4.63	6.75	8.88	11.00
21	1.13	20.50	23.63	43.00	44.00	2.50	0.88	1.75	3.75	5.00	7.13	9.25	4.63	6.75	8.88	11.00
25	1.13	24.88	28.00	51.75	52.75	2.50	0.88	1.75	3.75	5.00	7.13	9.25	4.63	6.75	8.88	11.00
30	1.13	24.88	28.00	51.75	52.75	2.50	0.88	1.75	3.75	5.00	7.13	9.25	4.63	6.75	8.88	11.00

Table 112. UA Coil Connection Locations

Unit Size	2 Row A	B	C	D	H	R	2 Row E	2 Row F	2 Row L
3	1.13	8.63	11.75	19.25	20.25	1.50	1.38	3.25	4.63
4	1.13	8.63	11.75	19.25	20.25	1.50	1.38	3.25	4.63
6	2.38	11.75	14.88	24.25	26.50	1.50	1.38	3.25	4.63
8	2.38	13.00	16.13	26.75	29.00	1.50	1.38	3.25	4.63
10	2.38	13.00	16.13	26.75	29.00	1.50	1.38	3.25	4.63
12	1.13	14.88	18.00	31.75	32.75	1.50	1.38	3.25	4.63
14	1.13	14.88	18.00	31.75	32.75	1.50	1.38	3.25	4.63
17	1.13	18.63	21.75	39.25	40.25	2.00	1.13	3.50	4.63
21	2.38	20.50	23.63	41.75	44.00	2.00	1.13	3.50	4.63
25	1.13	24.88	28.00	51.75	52.75	2.00	1.13	3.50	4.63
30	1.13	24.88	28.00	51.75	52.75	2.00	1.13	3.50	4.63

Table 113. UU Coil Connection Locations

Unit Size	4, 8 Row A	B	C	D	H	R	4 Row 8 Row E		4 Row 8 Row F		4 Row 8 Row L	
12	1.13	14.88	18.00	31.75	32.75	2.50	1.75	2.25	5.00	8.75	6.75	11.00
14	1.13	14.88	18.00	31.75	32.75	2.50	1.75	2.25	5.00	8.75	6.75	11.00
17	1.13	18.63	21.75	39.25	40.25	2.50	1.75	2.25	5.00	8.75	6.75	11.00
21	1.13	20.50	23.63	43.00	44.00	2.50	1.75	2.25	5.00	8.75	6.75	11.00
25	1.13	24.88	28.00	51.75	52.75	2.50	1.75	2.25	5.00	8.75	6.75	11.00
30	1.13	24.88	28.00	51.75	52.75	2.50	1.75	2.25	5.00	8.75	6.75	11.00

Diffuser

Figure 59. Diffuser section

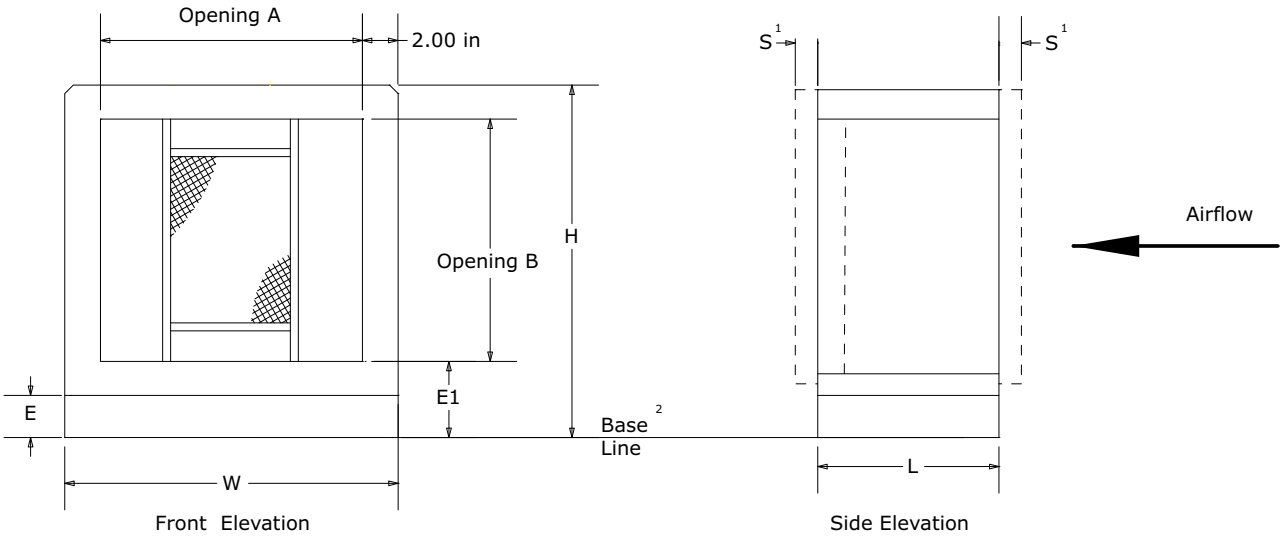

Table 114. Diffuser dimensions (inches)

				Front / Back Opening				
Unit Size	W	L	H	A	B	E	E1	S[1]
3	31.50	10.00	29.00	27.50	22.50	2.50	4.50	1.00
4	44.00	10.00	29.00	40.00	22.50	2.50	4.50	1.00
6	44.00	10.00	35.25	40.00	28.75	2.50	4.50	1.00
8	50.50	14.00	37.75	46.50	31.25	2.50	4.50	1.00
10	61.50	14.00	37.75	57.50	31.25	2.50	4.50	1.00
12	66.50	14.00	41.50	62.50	35.00	2.50	4.50	1.00
14	72.00	14.00	41.50	68.00	35.00	2.50	4.50	1.00
17	72.00	14.00	49.00	68.00	42.50	2.50	4.50	1.00
21	80.00	14.00	52.75	76.00	46.25	2.50	4.50	1.00
25	80.00	19.00	61.50	76.00	55.00	2.50	4.50	1.00
30	93.50	19.00	61.50	89.50	55.00	2.50	4.50	1.00

Note: [1]Shipping split flange dimension is for shipping planning purposes only and does not add to installed overall unit length. [2]Base line includes the height for standard 2.5-inch integral base frame.

Discharge Plenum

Figure 60. Horizontal discharge plenum with rectangular openings

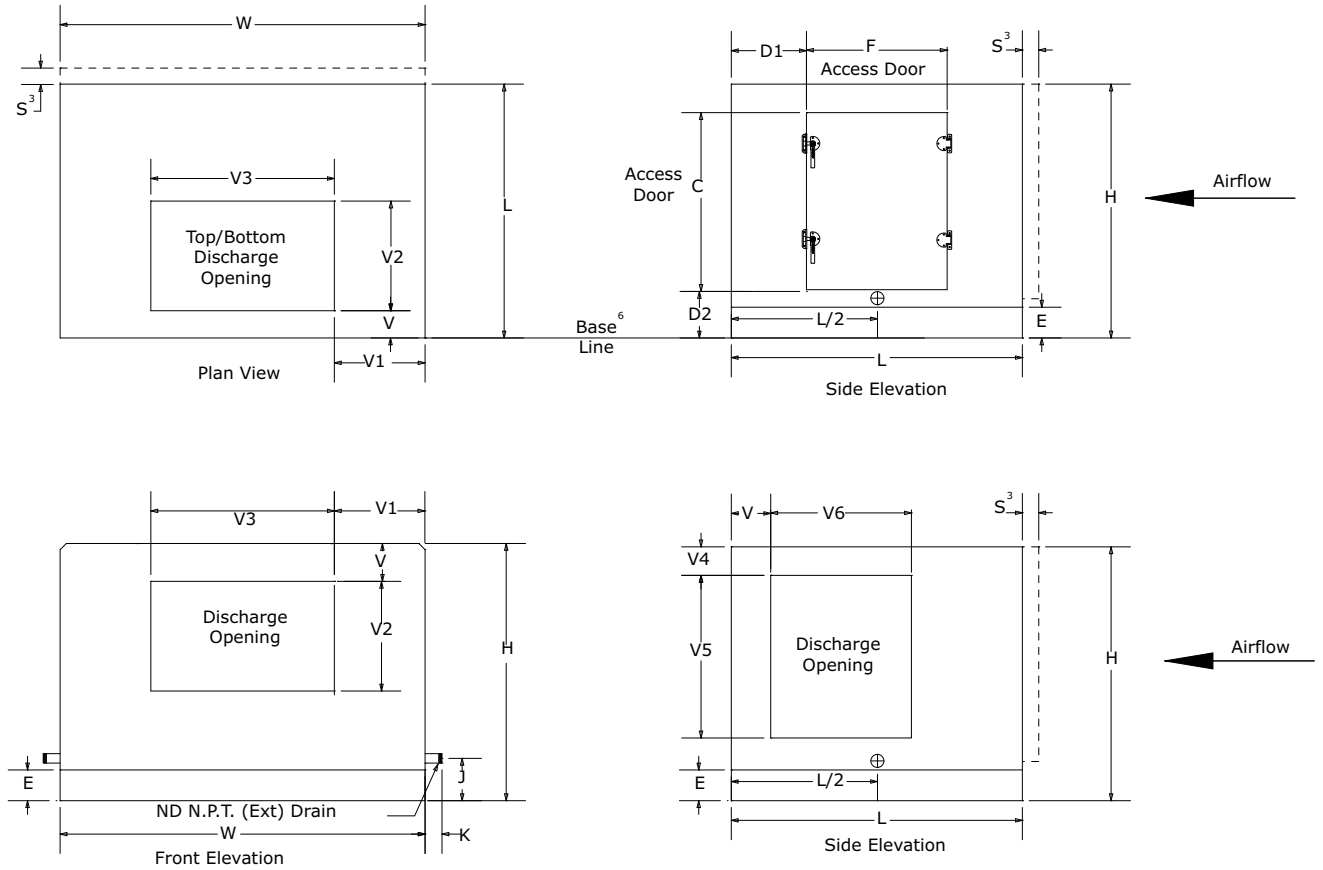

Figure 61. Horizontal discharge plenum with multiple/variable rectangular openings

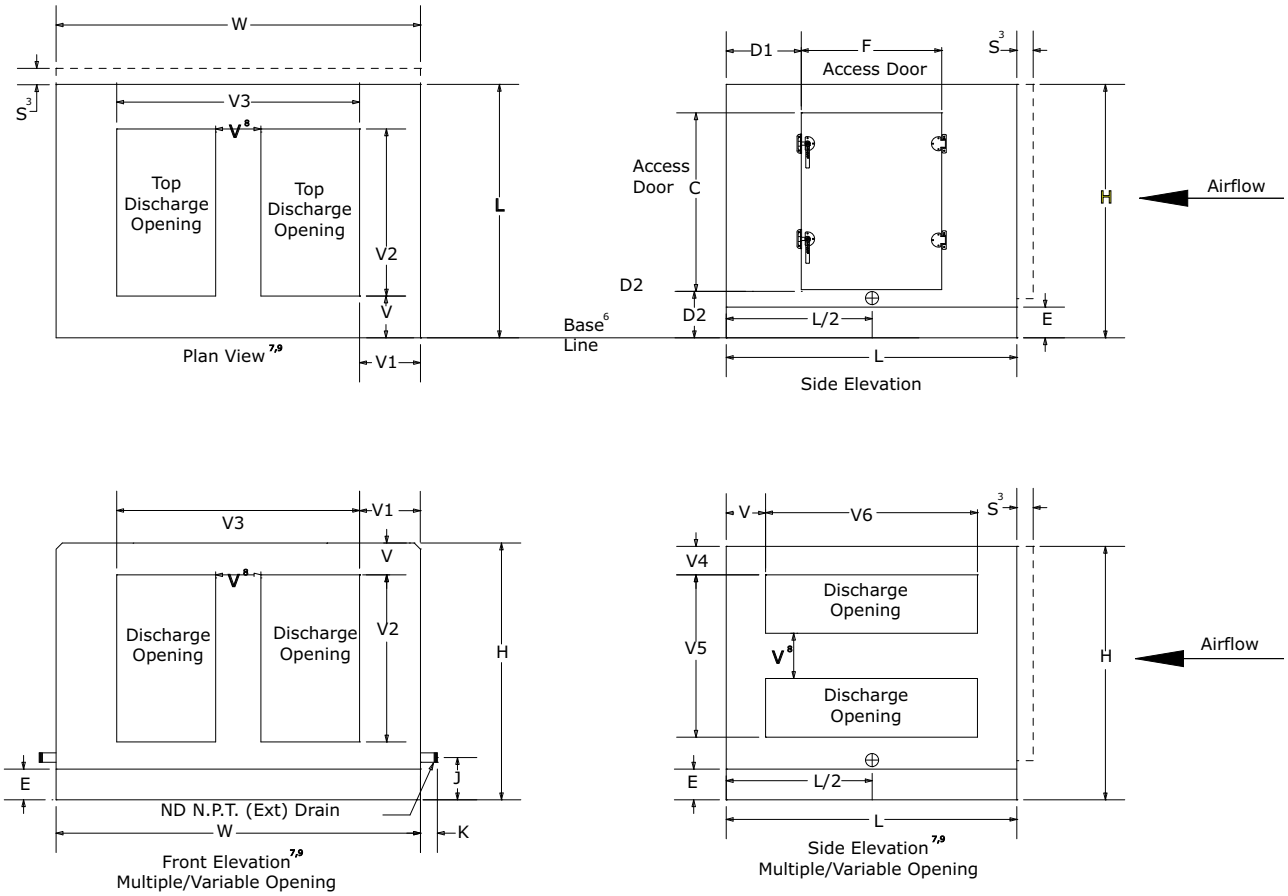

7. Reference full face dimensions for opening border limitations.
8. Multiple openings require a 4.13 inch space between openings.
9. Maximum two (2) openings per face. Opening splits can be horizontal or vertical.

Table 115. Discharge Plenum dimensions

Unit Size	W	H	L	Inward Door[4]					Outward Door[5]					Base	Drain Pan[2]			Shipping Split
				Hinged[1]	C	F	D1	D2	Hinged[1]	C	F	D1	D2	E	J	K	ND	S[3]
3	31.50	29.00	34.00	AL	19.38	16.00	9.00	5.38	AE	22.25	18.75	7.63	4.25	2.50	3.38	2.63	1.00	1.00
4	44.00	29.00	34.00	AL	19.38	16.00	9.00	5.38	AE	22.25	18.75	7.63	4.25	2.50	3.38	2.63	1.00	1.00
6	44.00	35.25	34.00	AL	25.63	16.00	9.00	5.38	AE	28.50	18.75	7.63	4.25	2.50	3.38	2.63	1.00	1.00
8	50.50	37.75	36.00	AL	28.13	16.00	10.00	5.38	AE	31.00	18.75	8.63	4.25	2.50	3.38	2.63	1.00	1.00
10	61.50	37.75	36.00	AL	28.13	16.00	10.00	5.38	AE	31.00	18.75	8.63	4.25	2.50	3.38	2.63	1.00	1.00
12	66.50	41.50	36.00	AL	31.88	16.00	10.00	5.38	AE	34.75	18.75	8.63	4.25	2.50	3.38	2.63	1.00	1.00
14	72.00	41.50	36.00	AL	31.88	16.00	10.00	5.38	AE	34.75	18.75	8.63	4.25	2.50	3.38	2.63	1.00	1.00
17	72.00	49.00	36.00	AL	39.38	17.63	9.25	5.38	AE	42.25	20.38	7.88	4.25	2.50	3.38	2.63	1.00	1.00
21	80.00	52.75	34.00	AL	43.13	16.00	9.00	5.38	AE	46.00	18.75	7.63	4.25	2.50	3.38	2.63	1.00	1.00
25	80.00	61.50	46.00	AL	51.88	17.63	14.25	5.38	AE	54.75	20.38	12.88	4.25	2.50	3.38	2.63	1.00	1.00
30	93.50	61.50	46.00	AL	51.88	17.63	14.25	5.38	AE	54.75	20.38	12.88	4.25	2.50	3.38	2.63	1.00	1.00

Note: [1]Hinged on air-entering (AE) side or air-leaving (AL) side. [2]Drain pan is not available with bottom opening. Drain pan connection dimension is nominal pipe size. IAQ drain pain connections can be either LH or RH, but not both. [3] Shipping split flange dimension is for shipping planning purposes only and does not add to installed overall unit length. [4] Inward swing doors are dimensioned to door opening. [5] Outward swing door opening is (F-2.73)by(C-1.80). [6] Base line includes the height for standard 2.5-inch integral base

Table 116. Horizontal discharge plenum dimensions - rectangular openings

Unit Size	W	H	L	V	Rectangular Openings														
					Front/Top/Bottom			Front Full Face			Top Full Face			Side			Side Full Face		
					V1	V2	V3	V1	V2	V3	V1	V2	V3	V4	V5	V6	V4	V5	V6
3	31.50	29.00	34.00	4.13	8.75	11.00	14.00	5.50	18.38	20.50	5.50	25.75	20.50	4.50	11.00	14.00	4.50	18.00	25.75
4	44.00	29.00	34.00	4.13	12.00	11.00	20.00	5.50	18.38	33.00	5.50	25.75	33.00	4.50	12.00	15.00	4.50	18.00	25.75
6	44.00	35.25	34.00	4.13	11.50	15.00	21.00	5.50	24.63	33.00	5.50	25.75	33.00	4.50	17.00	18.00	4.50	24.25	25.75
8	50.50	37.75	36.00	4.13	13.25	16.00	24.00	5.50	27.13	39.50	5.50	27.75	39.50	4.50	19.00	19.00	4.50	26.75	27.75
10	61.50	37.75	36.00	4.13	15.75	16.00	30.00	5.50	27.13	50.50	5.50	27.75	50.50	4.50	22.00	22.00	4.50	26.75	27.75
12	66.50	41.50	36.00	4.13	17.25	18.00	32.00	5.50	30.88	55.50	5.50	27.75	55.50	4.50	25.00	23.00	4.50	30.50	27.75
14	72.00	41.50	36.00	4.13	17.50	19.00	37.00	5.50	30.88	61.00	5.50	27.75	61.00	4.50	27.00	25.00	4.50	30.50	27.75
17	72.00	49.00	36.00	4.13	17.50	23.00	37.00	5.50	38.38	61.00	5.50	27.75	61.00	4.50	32.00	25.00	4.50	38.00	27.75
21	80.00	52.75	34.00	4.13	19.50	25.00	41.00	5.50	42.13	69.00	5.50	25.75	69.00	4.50	39.00	26.00	4.50	41.75	25.75
25	80.00	61.50	46.00	4.13	19.50	30.00	41.00	5.50	50.88	69.00	5.50	37.75	69.00	4.50	39.00	30.00	4.50	50.50	37.75
30	93.50	61.50	46.00	4.13	22.25	30.00	49.00	5.50	50.88	82.50	5.50	37.75	82.50	4.50	43.00	34.00	4.50	50.50	37.75

Figure 62. Horizontal discharge plenum with round openings

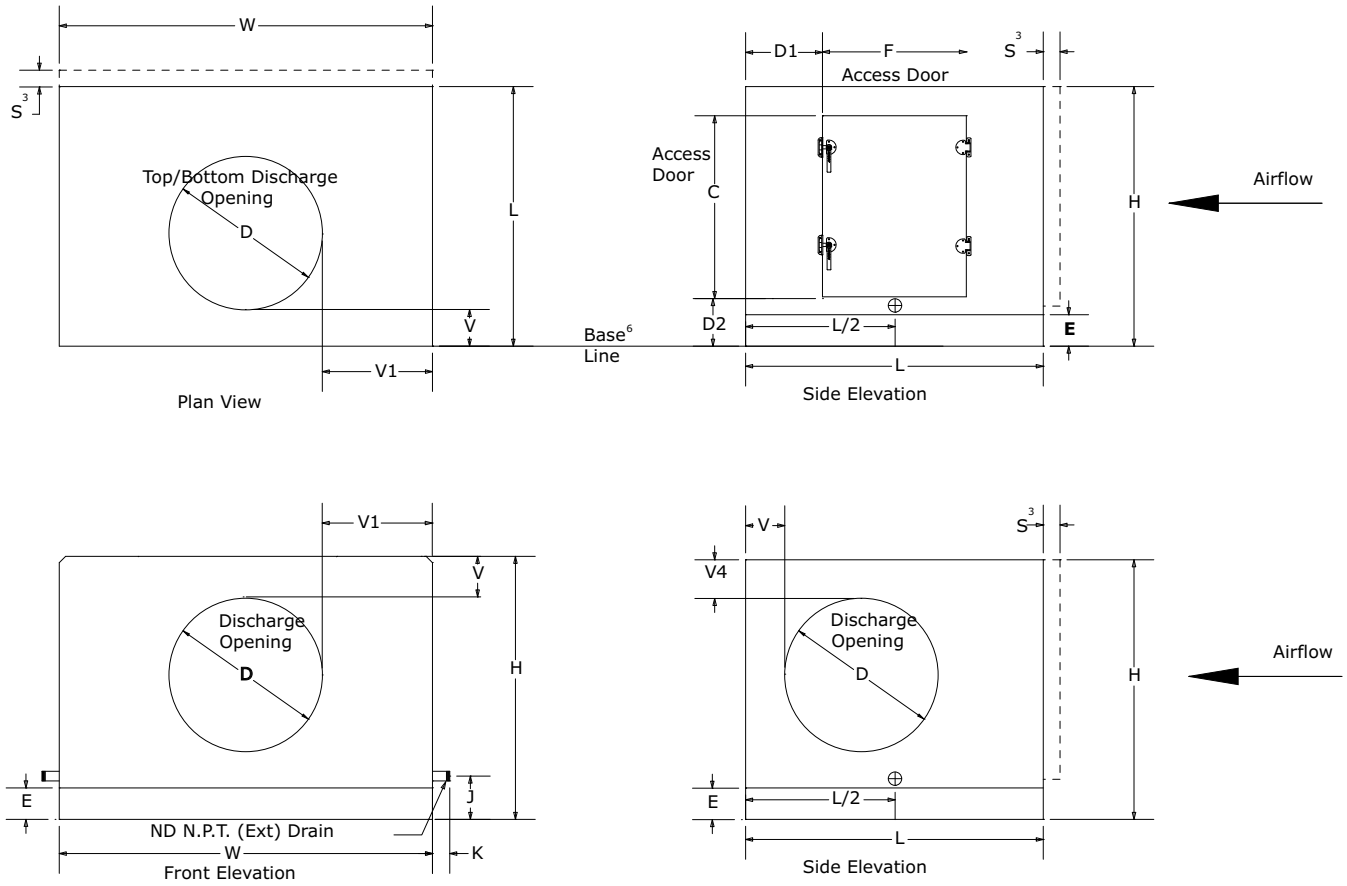

Figure 63. Horizontal discharge plenum with multiple/variable round openings

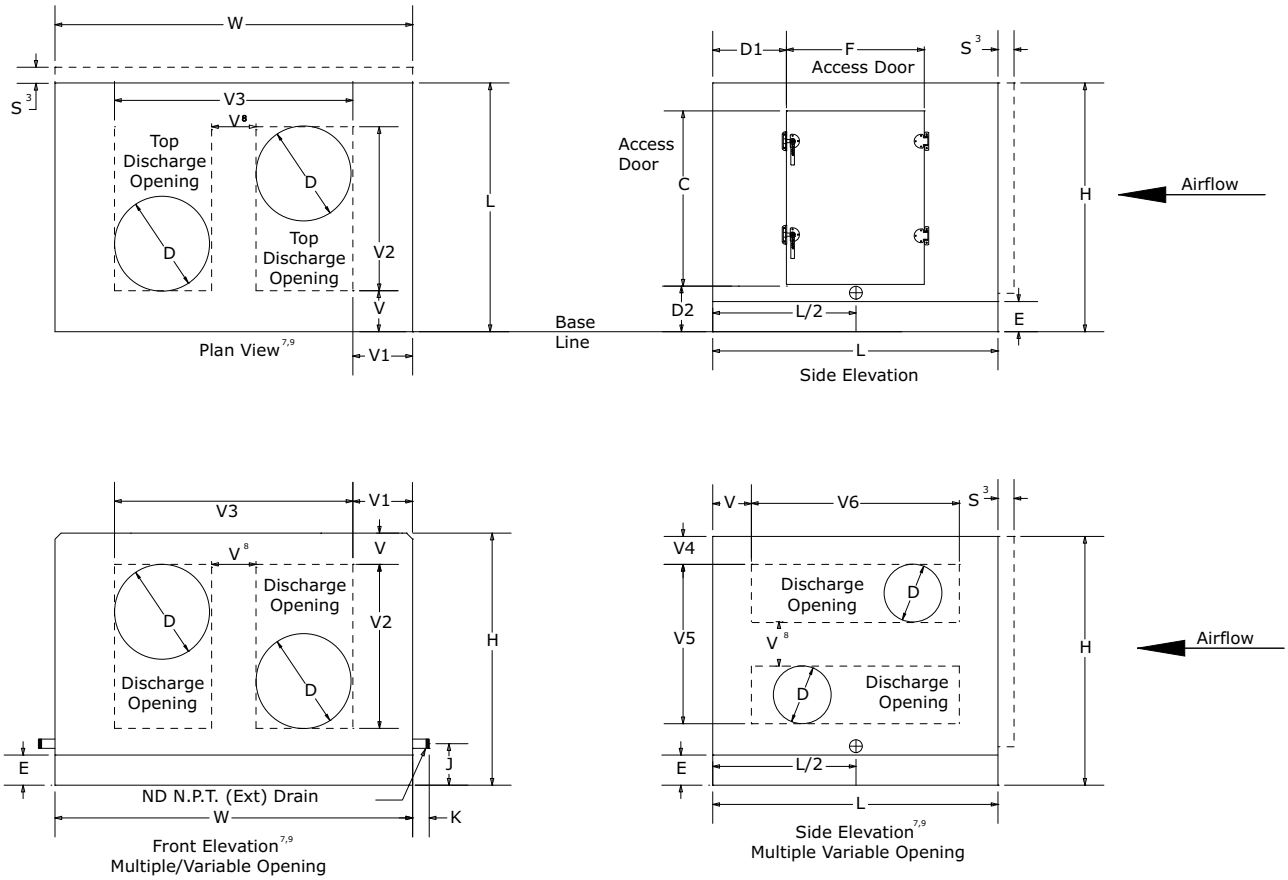

7. Reference full face dimensions for opening border limitations.
8. Multiple openings require a 4.13 inch space between openings.
9. Maximum two (2) openings per face. Open splits can be horizontal or vertical.

Table 117. Horizontal discharge plenum dimensions - round openings

					Round Openings					
					Front		Top/Bottom		Side	
Unit Size	W	H	L	V	V1	D	V1	D	V4	D
3	31.50	29.00	34.00	4.13	9.25	13.00	9.25	13.00	4.50	13.00
4	44.00	29.00	34.00	4.13	14.00	16.00	14.00	16.00	4.50	16.00
6	44.00	35.25	34.00	4.13	12.00	20.00	12.00	20.00	4.50	20.00
8	50.50	37.75	36.00	4.13	14.25	22.00	14.25	22.00	4.50	22.00
10	61.50	37.75	36.00	4.13	18.75	24.00	18.75	24.00	4.50	24.00
12	66.50	41.50	36.00	4.13	19.25	28.00	20.25	26.00	4.50	28.00
14	72.00	41.50	36.00	4.13	21.00	30.00	23.00	26.00	4.50	28.00
17	72.00	49.00	36.00	4.13	20.00	32.00	23.00	26.00	4.50	28.00
21	80.00	52.75	34.00	4.13	23.00	34.00	28.00	24.00	4.50	26.00
25	80.00	61.50	46.00	4.13	21.00	38.00	22.00	36.00	4.50	38.00
30	93.50	61.50	46.00	4.13	25.75	42.00	28.75	36.00	4.50	38.00

Note: [1]Hinged on air-entering (AE) side or air-leaving (AL) side. [2]Drain pan is not available with bottom opening. Drain pan connection dimension is nominal pipe size. IAQ drain pain connections can be either LH or RH, but not both. [3] Shipping split flange dimension is for shipping planning purposes only and does not add to installed overall unit length. [4] Inward swing doors are dimensioned to door opening. [5] Outward swing door opening is (F-2.73)by(C-1.80). [6] Base line includes the height for standard 2.5-inch integral base

Figure 64. Vertical discharge plenum with rectangular openings

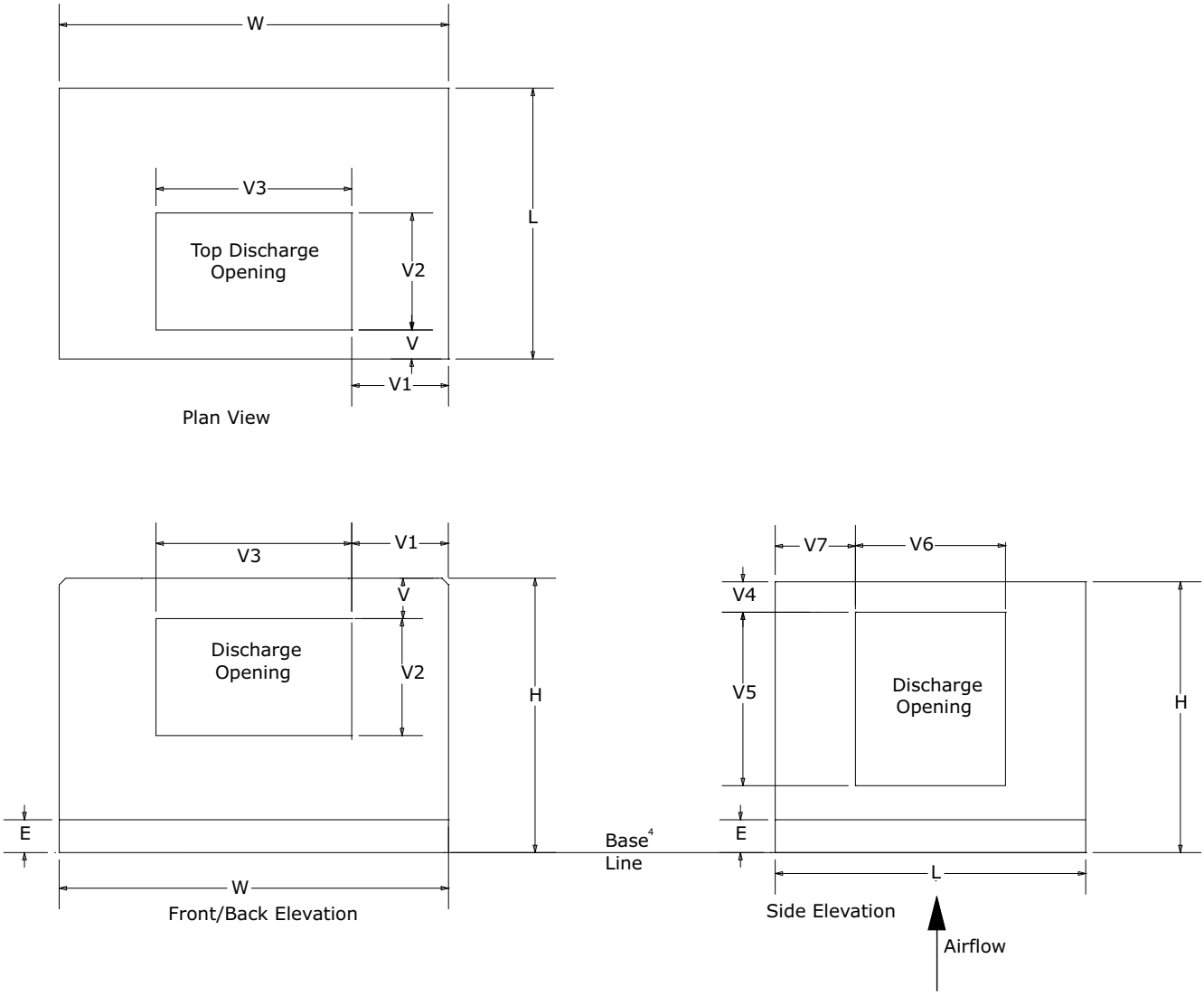

Figure 65. Vertical discharge plenum with multiple/variable rectangular openings

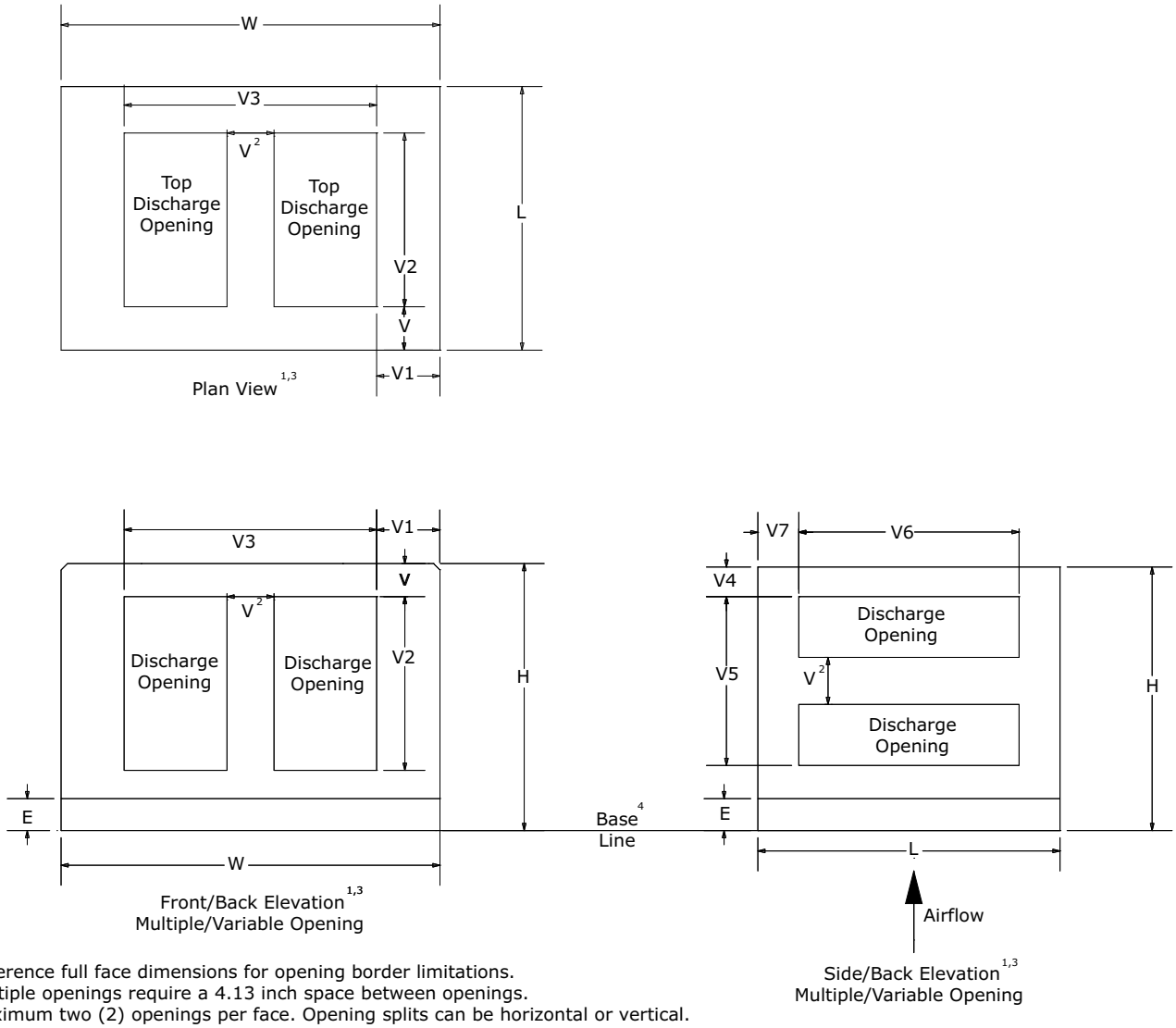

1. Reference full face dimensions for opening border limitations.
2. Multiple openings require a 4.13 inch space between openings.
3. Maximum two (2) openings per face. Opening splits can be horizontal or vertical.
4. Base line includes the height for standard 2.5-inch integral base frame.

Table 118. Vertical discharge plenum dimensions - rectangular openings

Unit Size	W	H	L	V	Rectangular Openings								
					Front / Top / Bottom			Front Full Face			Top Full Face		
					V1	V2	V3	V1	V2	V3	V1	V2	V3
3	31.50	29.00	36.00	4.13	8.75	11.00	14.00	5.50	18.38	20.50	5.50	27.75	20.50
4	44.00	29.00	41.00	4.13	12.00	11.00	20.00	5.50	18.38	33.00	5.50	32.75	33.00
6	44.00	35.25	41.00	4.13	11.50	15.00	21.00	5.50	24.63	33.00	5.50	32.75	33.00
8	50.50	37.75	44.00	4.13	13.25	16.00	24.00	5.50	27.13	39.50	5.50	35.75	39.50
10	61.50	37.75	42.50	4.13	15.75	16.00	30.00	5.50	27.13	50.50	5.50	34.25	50.50
12	66.50	41.50	42.50	4.13	17.25	18.00	32.00	5.50	30.88	55.50	5.50	34.25	55.50
14	72.00	41.50	42.50	4.13	17.50	19.00	37.00	5.50	30.88	61.00	5.50	34.25	61.00
17	72.00	49.00	44.00	4.13	17.50	23.00	37.00	5.50	38.38	61.00	5.50	35.75	61.00
21	80.00	52.75	50.25	4.13	19.50	25.00	41.00	5.50	42.13	69.00	5.50	42.00	69.00
25	80.00	61.50	56.50	4.13	19.50	30.00	41.00	5.50	50.88	69.00	5.50	48.25	69.00
30	93.50	61.50	56.50	4.13	22.25	30.00	49.00	5.50	50.88	82.50	5.50	48.25	82.50

Unit Size	W	H[1]	L	V	Rectangular Openings[2]							
					Side				Side Full Face			
					V4	V5	V6	V7	V4	V5	V6	V7
3	31.50	29.00	36.00	4.13	4.50	11.00	14.00	11.00	4.50	18.00	27.75	4.13
4	44.00	29.00	41.00	4.13	4.50	12.00	15.00	13.00	4.50	18.00	32.75	4.13
6	44.00	35.25	41.00	4.13	4.50	17.00	18.00	11.50	4.50	24.25	32.75	4.13
8	50.50	37.75	44.00	4.13	4.50	19.00	19.00	12.50	4.50	26.75	35.75	4.13
10	61.50	37.75	42.50	4.13	4.50	22.00	22.00	10.25	4.50	26.75	34.25	4.13
12	66.50	41.50	42.50	4.13	4.50	25.00	23.00	9.75	4.50	30.50	34.25	4.13
14	72.00	41.50	42.50	4.13	4.50	27.00	25.00	8.75	4.50	30.50	34.25	4.13
17	72.00	49.00	44.00	4.13	4.50	32.00	25.00	9.50	4.50	38.00	35.75	4.13
21	80.00	52.75	50.25	4.13	4.50	39.00	26.00	12.13	4.50	41.75	42.00	4.13
25	80.00	61.50	56.50	4.13	4.50	39.00	30.00	13.25	4.50	50.50	48.25	4.13
30	93.50	61.50	56.50	4.13	4.50	43.00	34.00	11.25	4.50	50.50	48.25	4.13

Note: **1** Nominal height shown. Variable plenum height is available from 0.5 to 1.5 of nominal. **2** Opening dimensions based on nominal vertical discharge plenum height.

Figure 66. Vertical discharge plenum with round openings

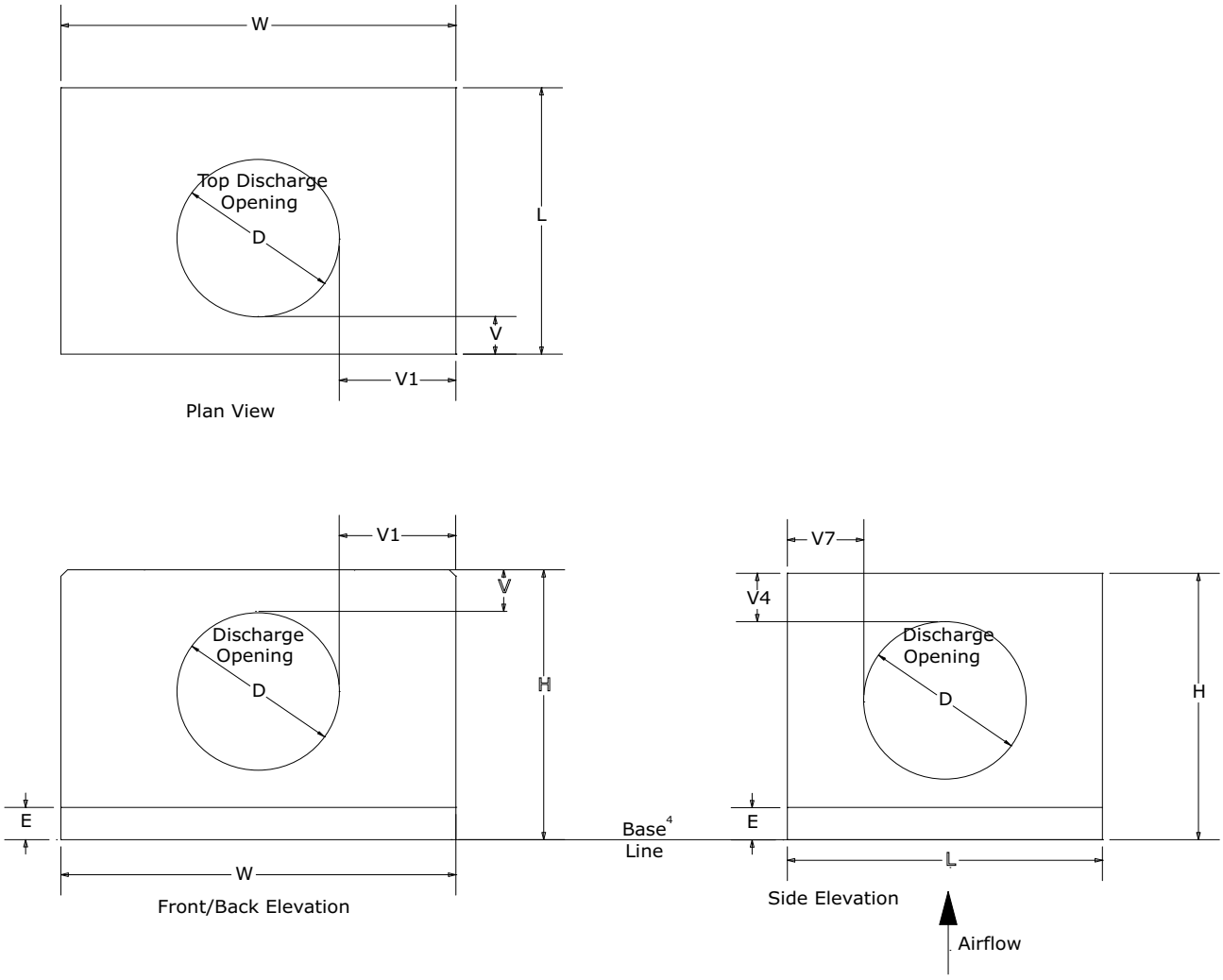

Figure 67. Vertical discharge plenum with multiple/variable round openings

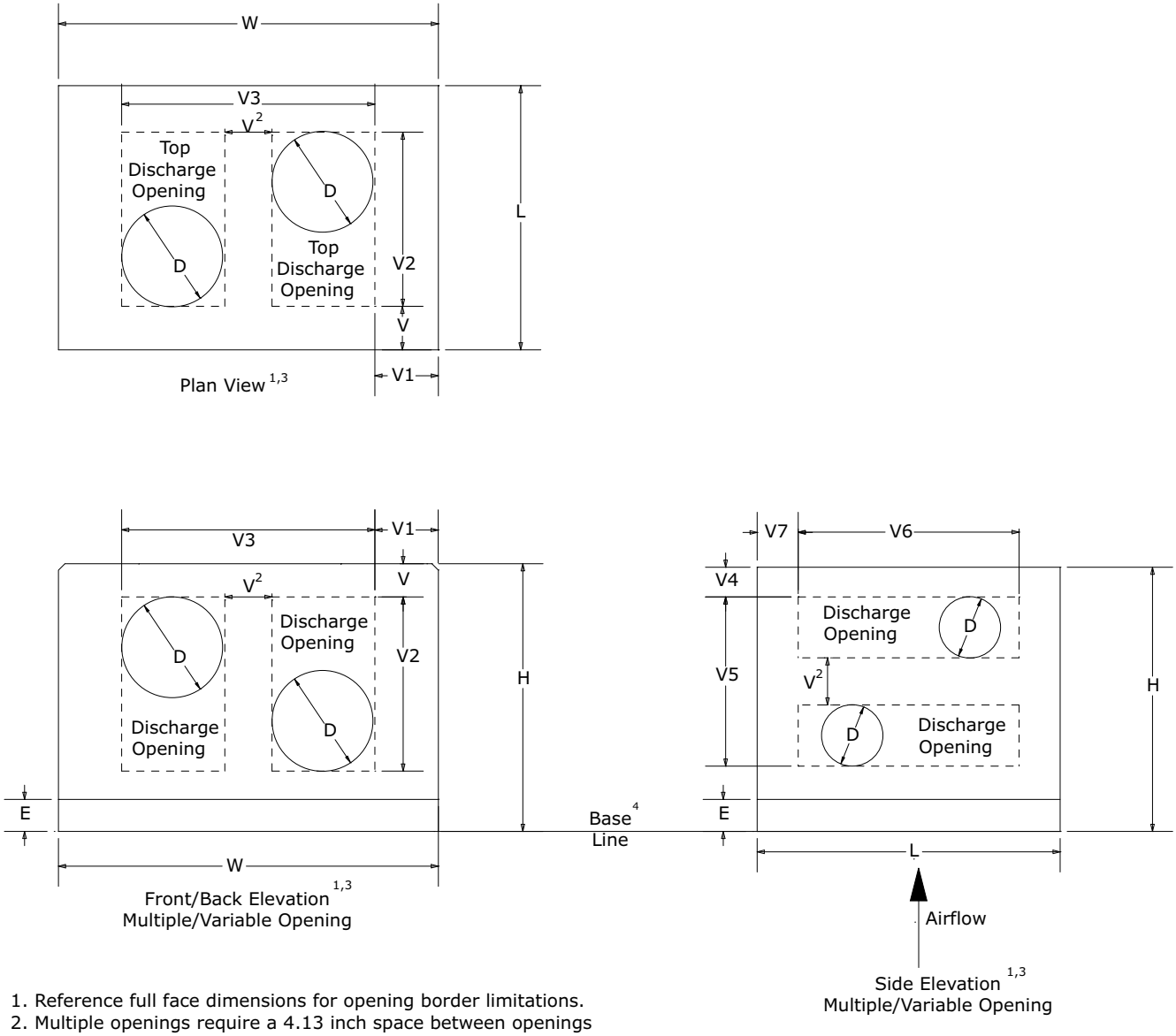

1. Reference full face dimensions for opening border limitations.
2. Multiple openings require a 4.13 inch space between openings
3. Maximum two (2) openings per face. Open splits can be horizontal or vertical.
4. Base line includes the height for standard 2.5-inch intergral base frame.

Vertical discharge plenum dimensions - round openings

					Round Openings[2]				
					Front/Back/Top		Side		
Unit Size	W	H[1]	L	V	V1	D	V4	V7	D
3	31.50	29.00	36.00	4.13	9.25	13.00	4.50	11.50	13.00
4	44.00	29.00	41.00	4.13	14.00	16.00	4.50	12.50	16.00
6	44.00	35.25	41.00	4.13	12.00	20.00	4.50	10.50	20.00
8	50.50	37.75	44.00	4.13	14.25	22.00	4.50	11.00	22.00
10	61.50	37.75	42.50	4.13	18.75	24.00	4.50	9.25	24.00
12	66.50	41.50	42.50	4.13	19.25	28.00	4.50	7.25	28.00
14	72.00	41.50	42.50	4.13	21.00	30.00	4.50	6.25	30.00
17	72.00	49.00	44.00	4.13	20.00	32.00	4.50	6.00	32.00
21	80.00	52.75	50.25	4.13	23.00	34.00	4.50	8.13	34.00
25	80.00	61.50	56.50	4.13	21.00	38.00	4.50	9.25	38.00
30	93.50	61.50	56.50	4.13	25.75	42.00	4.50	7.25	42.00

Note: **1**Nominal height shown. Variable plenum height is available from 0.5 to 1.5 of nominal. **2** Opening dimensions based on nominal vertical discharge plenum height.

Fans/Motors

Starter/VFD Weights

Fan weights do not include starter/VFD weights. The table below gives approximate starter/VFD weights.

Table 119. Approximate starter and VFD weights per horsepower (lbs.)

Horsepower	1	1.5	2	3	5	7.5	10	15	20	25	30	40	50	60	75	100	125
Starter[1]	65	65	65	65	65	65	65	65	65	97	97	97	97	97	97	97	97
VFD[2]	123	123	132	124	125	136	151	162	177	197	241	325	332	243	258	294	314

Note: [1]These weights represent the largest available starter. [2]VFD weights include transformer and power isolation switch. Does not include control door assembly.

Motor Weights

Fan weights provided in this manual include the heaviest ODP (open drip-proof) motor.

Table 120. Approximate motor weights (pounds)

		Horsepower												
Motor Type	Voltage	3/4	1	1-1/2	2	3	5	7-1/2	10	15	20	25	30	40
Energy efficient ODP (EEOP)	115/230/1	30	33											
NEMA Premium ODP (HEOP)	200/3	28	34	40	44	66	70	110	140	223	226	300	361	476
	230/460/3	48	34	38	44	66	79	113	120	223	243	320	368	510
NEMA Premium TEFC (HETC)	230/460/3		35	40	47	89	92	132	153	247	282	386	420	590
	575/3		36	40	46	66	88	138	148	228	293	433	438	587

Control Section

Figure 68. High voltage door 1

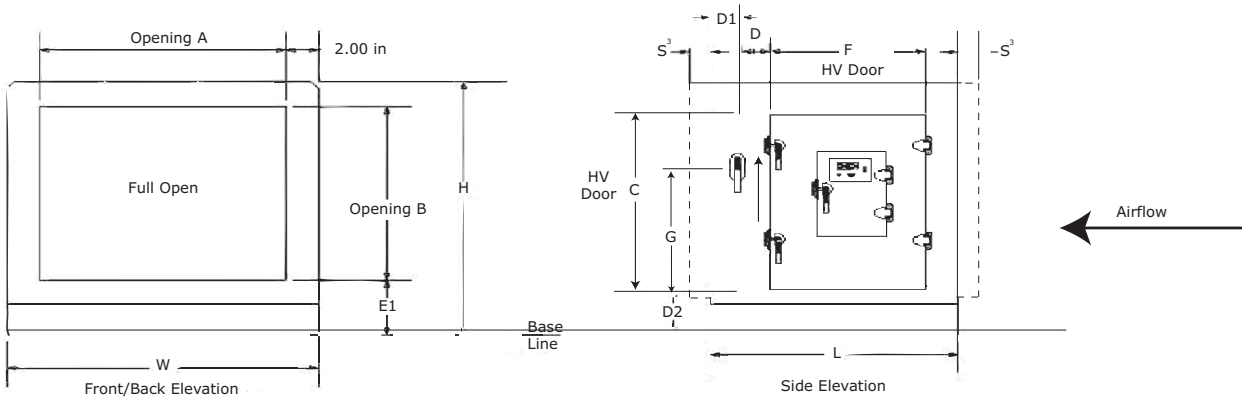

Table 121.High voltage door right hand

						Outward Swing Door Only						
Unit Size	W	H	Length	Door side	Hinged[1]	C	F	D1	D	D2	G	S[3]
3	31.50	29.00	24.50	RH	AE	22.25	17.38	2.25	3.00	4.25	13.75	1.00
4	44.00	29.00	24.50	RH	AE	22.25	17.38	2.25	3.00	4.25	13.75	1.00
6	44.00	35.25	24.50	RH	AE	28.50	17.38	2.25	3.00	4.25	20.00	1.00
8	50.50	37.75	24.50	RH	AE	31.00	17.38	2.25	3.00	4.25	22.50	1.00
10	61.50	37.75	24.50	RH	AE	31.00	17.38	2.25	3.00	4.25	22.50	1.00
12	66.50	41.50	24.50	RH	AE	34.75	17.38	2.25	3.00	4.25	26.25	1.00
14	72.00	41.50	24.50	RH	AE	34.75	17.38	2.25	3.00	4.25	26.25	1.00
17	72.00	49.00	24.50	RH	AE	42.25	17.38	2.25	3.00	4.25	33.75	1.00
21	80.00	52.75	24.50	RH	AE	46.00	17.38	2.25	3.00	4.25	37.50	1.00
25	80.00	61.50	24.50	RH	AE	54.75	17.38	2.25	3.00	4.25	46.25	1.00
30	93.50	61.50	24.50	RH	AE	54.75	17.38	2.25	3.00	4.25	46.25	1.00

Note: High voltage doors have the option to include low voltage doors on the supply side. **1** Hinged on air-entering (AE) side or air-leaving (AL) side. **2** Same dimensions as access section. **3** Shipping split flange dimension is for shipping and installation planning purposes only and does not add to installed overall unit length. **4** Base line includes the height for standard 2.5-inch integral base frame.

Table 122.High voltage door left hand

						Outward Swing Door Only						
Unit Size	W	H	Length	Door side	Hinged[1]	C	F	D1	D	D2	G	S[3]
3	31.50	29.00	24.50	LH	AL	22.25	17.38	2.25	3.00	4.25	13.75	1.00
4	44.00	29.00	24.50	LH	AL	22.25	17.38	2.25	3.00	4.25	13.75	1.00
6	44.00	35.25	24.50	LH	AL	28.50	17.38	2.25	3.00	4.25	20.00	1.00
8	50.50	37.75	24.50	LH	AL	31.00	17.38	2.25	3.00	4.25	22.50	1.00
10	61.50	37.75	24.50	LH	AL	31.00	17.38	2.25	3.00	4.25	22.50	1.00
12	66.50	41.50	24.50	LH	AL	34.75	17.38	2.25	3.00	4.25	26.25	1.00
14	72.00	41.50	24.50	LH	AL	34.75	17.38	2.25	3.00	4.25	26.25	1.00
17	72.00	49.00	24.50	LH	AL	42.25	17.38	2.25	3.00	4.25	33.75	1.00
21	80.00	52.75	24.50	LH	AL	46.00	17.38	2.25	3.00	4.25	37.50	1.00
25	80.00	61.50	24.50	LH	AL	54.75	17.38	2.25	3.00	4.25	46.25	1.00
30	93.50	61.50	24.50	LH	AL	54.75	17.38	2.25	3.00	4.25	46.25	1.00

Note: High voltage doors have the option to include low voltage doors on the supply side. **1** Hinged on air-entering (AE) side or air-leaving (AL) side. **2** Same dimensions as access section. **3** Shipping split flange dimension is for shipping and installation planning purposes only and does not add to installed overall unit length. **4** Base line includes the height for standard 2.5-inch integral base frame.

Housed Fans

Figure 69. Housed Fan

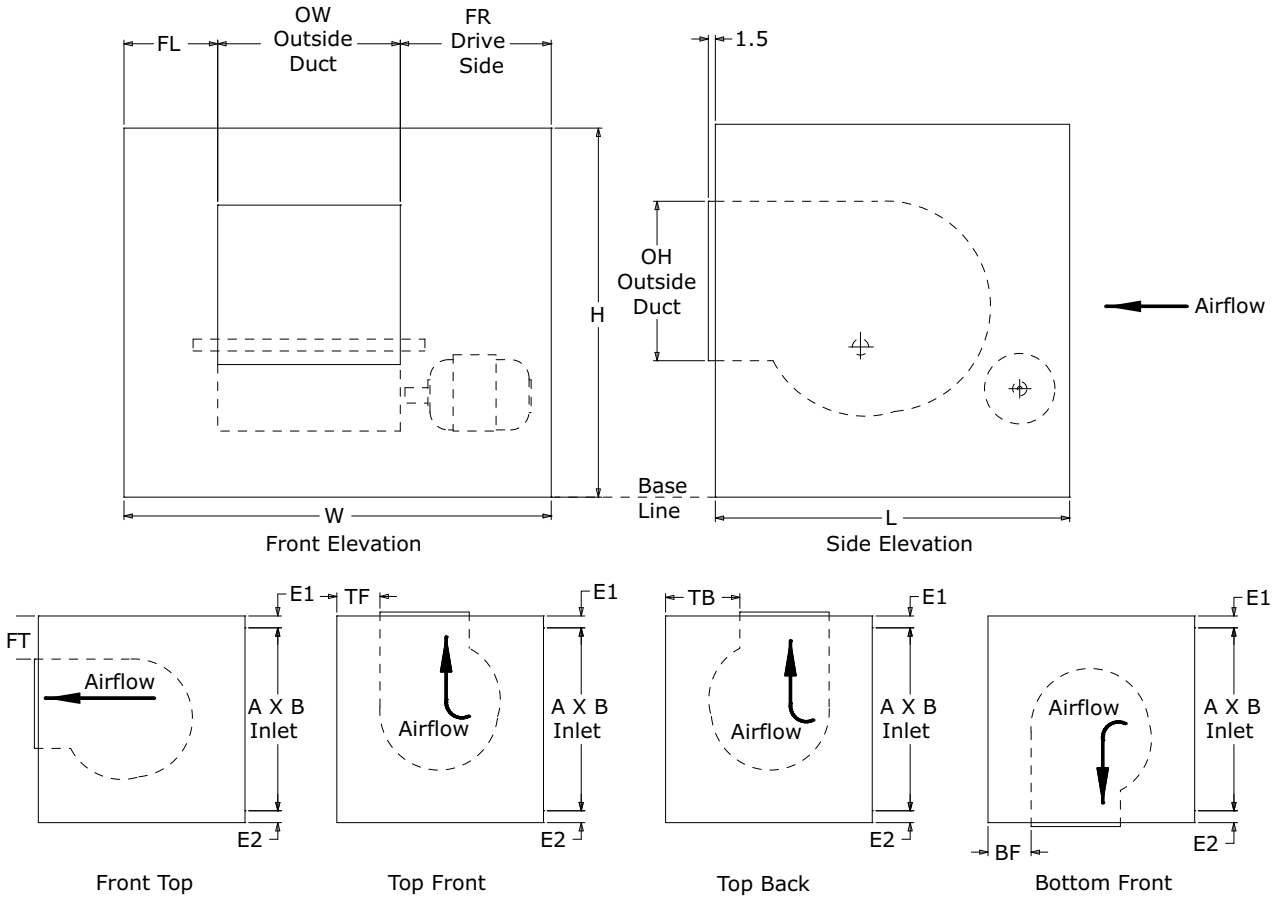

Table 123.Housed fan dimensions

Unit Size	Fan Size	W	L	H	Full Face Inlet Dimensions A	B	E1	E2	Door Dimensions C	F	D	D1	D2
3	9 FC 9-6 FC 9-4 FC 9 BC	31.50	36.00	29.00	27.50	22.50	2.00	4.50	22.25	13.75	3.13	2.63	4.25
4	10 FC 9 FC 9-6 FC 10 BC 9 BC	44.00	41.00	29.00	40.00	22.50	2.00	4.50	22.25	18.75	3.13	2.63	4.25
6	12 FC 10 FC 9 FC 12 AF 10 BC 9 BC	44.00	41.00	35.25	40.00	28.75	2.00	4.50	28.50	16.75	3.13	2.63	4.25
8	12 FC 10 FC 9 FC 12 AF 10 BC 9 BC	50.50	44.00	37.75	46.50	31.25	2.00	4.50	31.00	18.75	3.13	2.63	4.25
10	15 FC 12 FC 10 FC 15 AF 12 AF 10 BC	61.50	42.50	37.75	57.50	31.25	2.00	4.50	31.00	17.25	3.13	2.63	4.25
12	18 FC 15 FC 12 FC 18 AF 15 AF 12 AF	66.50	42.50	41.50	62.50	35.00	2.00	4.50	34.75	17.25	3.13	2.63	4.25
14	18 FC 15 FC 12 FC 18 AF 15 AF 12 AF	72.00	42.50	41.50	68.00	35.00	2.00	4.50	34.75	17.25	3.13	2.63	4.25
17	20 FC 18 FC 15 FC 20 AF 18 AF 15 AF	72.00	44.00	49.00	68.00	42.50	2.00	4.50	42.25	17.75	3.13	2.63	4.25
21	22 FC 20 FC 18 FC 22 AF 20 AF 18 AF	80.00	50.25	52.75	76.00	46.25	2.00	4.50	46.00	22.00	3.13	2.63	4.25

Table 123.Housed fan dimensions

Unit Size	Fan Size	W	L	H	Full Face Inlet Dimensions A	B	E1	E2	Door Dimensions C	F	D	D1	D2
25	22 FC 20 FC 18 FC 22 AF 20 AF 18 AF	80.00	56.50	61.50	76.00	55.00	2.00	4.50	54.75	26.75	3.13	2.63	4.25
30	25 FC 22 FC 20 FC 25 AF 22 AF 20 AF	93.50	56.50	61.50	89.50	55.00	2.00	4.50	54.75	26.75	3.13	2.63	4.25

Table 124.Housed Fan Dimensions

Unit Size	Fan Size	FTTP/BKTP Discharge Opening FT	FR	FL	FOH	FOW	TPFT/TPBK Discharge Opening TF	TB	TR	TL	TOL	TOW	BTFT/BTBK Discharge Opening BF	BB	BR	BL	BOL	BOW
3	9 FC	7.50	10.00	10.00	10.38	11.75	5.38	20.25	9.88	9.88	10.50	12.00	4.88	19.88	9.38	9.38	11.50	12.88
	9-6 FC	7.50	11.63	11.63	10.38	8.38	5.38	20.25	11.63	11.63	10.50	8.50	4.88	19.88	11.13	11.13	11.50	9.38
	9-4 FC	7.50	12.38	12.38	10.38	6.88	5.38	20.25	12.38	12.38	10.50	7.00	4.88	19.88	11.88	11.88	11.50	8.00
	9 BC	7.50	10.00	10.00	10.38	11.75	5.38	20.25	9.88	9.88	10.50	12.00	4.88	19.88	9.38	9.38	11.50	12.88
4	10 FC	5.63	15.50	15.50	11.38	13.13	5.63	24.00	15.50	15.50	11.63	13.25	5.13	23.63	15.00	15.00	12.50	14.13
	9 FC	7.50	16.25	16.25	10.38	11.75	5.63	25.13	16.13	16.13	10.50	12.00	5.13	24.63	15.63	15.63	11.50	12.88
	9-6 FC	7.50	17.88	17.88	10.38	8.38	5.63	25.13	17.88	17.88	10.50	8.50	5.13	24.63	17.38	17.38	11.50	9.38
	10 BC	5.63	15.50	15.50	11.38	13.13	5.63	24.00	15.50	15.50	11.63	13.25	5.13	23.63	15.00	15.00	12.50	14.13
	9 BC	7.50	16.25	16.25	10.38	11.75	5.63	25.13	16.13	16.13	10.50	12.00	5.13	24.63	15.63	15.63	11.50	12.88
6	12 FC	8.75	14.25	14.25	13.50	15.63	5.63	21.88	14.25	14.25	13.63	15.75	5.13	21.50	13.75	13.75	14.63	16.75
	10 FC	11.88	15.50	15.50	11.38	13.13	5.63	24.00	15.50	15.50	11.63	13.25	5.13	23.63	15.00	15.00	12.50	14.13
	9 FC	13.75	16.25	16.25	10.38	11.75	5.50	25.25	16.13	16.13	10.50	12.00	5.00	24.75	15.63	15.63	11.50	12.88
	12 AF	8.75	14.25	14.25	13.50	15.63	5.63	21.88	14.25	14.25	13.63	15.75	5.13	21.50	13.75	13.75	14.63	16.75
	10 BC	11.88	15.50	15.50	11.38	13.13	5.63	24.00	15.50	15.50	11.63	13.25	5.13	23.63	15.00	15.00	12.50	14.13
	9 BC	13.75	16.25	16.25	10.38	11.75	5.50	25.25	16.13	16.13	10.50	12.00	5.00	24.75	15.63	15.63	11.50	12.88
8	12 FC	11.25	17.50	17.50	13.50	15.63	5.63	24.88	17.50	17.50	13.63	15.75	5.13	24.50	17.00	17.00	14.63	16.75
	10 FC	14.38	18.75	18.75	11.38	13.13	5.63	27.00	18.75	18.75	11.63	13.25	5.13	26.63	18.25	18.25	12.50	14.13
	9 FC	16.25	19.50	19.50	10.38	11.75	5.50	28.25	19.38	19.38	10.50	12.00	5.00	27.75	18.88	18.88	11.50	12.88
	12 AF	11.25	17.50	17.50	13.50	15.63	5.63	24.88	17.50	17.50	13.63	15.75	5.13	24.50	17.00	17.00	14.63	16.75
	10 BC	14.38	18.75	18.75	11.38	13.13	5.63	27.00	18.75	18.75	11.63	13.25	5.13	26.63	18.25	18.25	12.50	14.13
	9 BC	16.25	19.50	19.50	10.38	11.75	5.50	28.25	19.38	19.38	10.50	12.00	5.00	27.75	18.88	18.88	11.50	12.88
10	15 FC	5.13	33.50	9.50	15.88	18.63	14.00	12.63	33.38	9.50	16.13	18.75	13.50	12.13	33.00	9.00	17.00	19.75
	12 FC	8.88	33.50	12.50	13.50	15.63	17.75	11.25	33.38	12.50	13.63	15.75	17.38	10.75	33.00	12.00	14.63	16.75
	10 FC	12.00	33.50	15.13	11.38	13.13	20.88	10.25	33.50	14.88	11.63	13.25	20.38	9.75	33.13	14.38	12.50	14.13
	15 AF	5.13	33.50	9.50	15.88	18.63	14.00	12.63	33.38	9.50	16.13	18.75	13.50	12.13	33.00	9.00	17.00	19.75
	12 AF	8.88	33.50	12.50	13.50	15.63	17.75	11.25	33.38	12.50	13.63	15.75	17.38	10.75	33.00	12.00	14.63	16.75
	10 BC	12.00	33.50	15.13	11.38	13.13	20.88	10.25	33.50	14.88	11.63	13.25	20.38	9.75	33.13	14.38	12.50	14.13
12	18 FC	3.88	33.63	11.00	18.88	22.00	9.13	14.63	33.50	11.00	19.00	22.13	8.63	14.13	33.13	10.50	19.88	23.13
	15 FC	8.88	33.63	14.50	15.88	18.63	14.00	12.63	33.50	14.38	16.13	18.75	13.50	12.13	33.13	13.88	17.00	19.75
	12 FC	12.63	33.63	17.50	13.50	15.63	17.75	11.25	33.50	17.38	13.63	15.75	17.38	10.75	33.13	16.88	14.63	16.75
	18 AF	3.88	33.63	11.00	18.88	22.00	9.13	14.63	33.50	11.00	19.00	22.13	8.63	14.13	33.13	10.50	19.88	23.13
	15 AF	8.88	33.63	14.50	15.88	18.63	14.00	12.63	33.50	14.38	16.13	18.75	13.50	12.13	33.13	13.88	17.00	19.75
	12 AF	12.63	33.63	17.50	13.50	15.63	17.75	11.25	33.50	17.38	13.63	15.75	17.38	10.75	33.13	16.88	14.63	16.75

Table 124.Housed Fan Dimensions

Unit Size	Fan Size	FTTP/BKTP Discharge Opening					TPFT/TPBK Discharge Opening						BTFT/BTBK Discharge Opening					
		FT	FR	FL	FOH	FOW	TF	TB	TR	TL	TOL	TOW	BF	BB	BR	BL	BOL	BOW
14	18 FC	3.88	35.00	15.25	18.88	22.00	9.13	14.63	34.75	15.25	19.00	22.13	8.63	14.13	34.38	14.75	19.88	23.13
	15 FC	8.88	35.00	18.63	15.88	18.63	14.00	12.63	34.75	18.63	16.13	18.75	13.50	12.13	34.38	18.13	17.00	19.75
	12 FC	12.63	35.00	21.63	13.50	15.63	17.75	11.25	34.75	21.63	13.63	15.75	17.38	10.75	34.38	21.13	14.63	16.75
	18 AF	3.88	35.00	15.25	18.88	22.00	9.13	14.63	34.75	15.25	19.00	22.13	8.63	14.13	34.38	14.75	19.88	23.13
	15 AF	8.88	35.00	18.63	15.88	18.63	14.00	12.63	34.75	18.63	16.13	18.75	13.50	12.13	34.38	18.13	17.00	19.75
	12 AF	12.63	35.00	21.63	13.50	15.63	17.75	11.25	34.75	21.63	13.63	15.75	17.38	10.75	34.38	21.13	14.63	16.75
17	20 FC	4.88	35.00	12.00	25.13	25.13	4.50	14.38	34.88	12.00	25.38	25.38	7.50	10.50	34.38	11.50	26.25	26.25
	18 FC	11.38	35.00	15.25	18.88	22.00	10.63	14.63	34.88	15.13	19.00	22.13	10.13	14.13	34.38	14.75	19.88	23.13
	15 FC	16.38	35.00	18.63	15.88	18.63	15.50	12.63	34.88	18.63	16.13	18.75	15.00	12.13	34.38	18.13	17.00	19.75
	20 AF	4.88	35.00	12.00	25.13	25.13	4.50	14.38	34.88	12.00	25.38	25.38	7.50	10.50	34.38	11.50	26.25	26.25
	18 AF	11.38	35.00	15.25	18.88	22.00	10.63	14.63	34.88	15.13	19.00	22.13	10.13	14.13	34.38	14.75	19.88	23.13
	15 AF	16.38	35.00	18.63	15.88	18.63	15.50	12.63	34.88	18.63	16.13	18.75	15.00	12.13	34.38	18.13	17.00	19.75
21	22 FC	3.38	38.88	13.00	28.25	28.25	7.25	14.75	38.75	13.00	28.38	28.38	7.50	13.75	38.38	12.50	29.25	29.25
	20 FC	7.75	38.88	16.13	25.13	25.13	11.38	13.75	38.75	16.00	25.38	25.38	10.88	13.25	38.38	15.50	26.25	26.25
	18 FC	14.25	38.88	19.25	18.88	22.00	16.88	14.63	38.75	19.25	19.00	22.13	16.38	14.13	38.38	18.75	19.88	23.13
	22 AF	3.38	38.88	13.00	28.25	28.25	7.25	14.75	38.75	13.00	28.38	28.38	7.50	13.75	38.38	12.50	29.25	29.25
	20 AF	7.75	38.88	16.13	25.13	25.13	11.38	13.75	38.75	16.00	25.38	25.38	10.88	13.25	38.38	15.50	26.25	26.25
	18 AF	14.25	38.88	19.25	18.88	22.00	16.88	14.63	38.75	19.25	19.00	22.13	16.38	14.13	38.38	18.75	19.88	23.13
25	22 FC	12.13	38.88	13.00	28.25	28.25	13.50	14.75	38.75	13.00	28.38	28.38	13.00	14.38	38.38	12.50	29.25	29.25
	20 FC	16.50	38.88	16.13	25.13	25.13	17.63	13.63	38.75	16.00	25.38	25.38	17.13	13.25	38.38	15.50	26.25	26.25
	18 FC	23.00	38.88	19.25	18.88	22.00	23.13	14.63	38.75	19.25	19.00	22.13	22.63	14.13	38.38	18.75	19.88	23.13
	22 AF	12.13	38.88	13.00	28.25	28.25	13.50	14.75	38.75	13.00	28.38	28.38	13.00	14.38	38.38	12.50	29.25	29.25
	20 AF	16.50	38.88	16.13	25.13	25.13	17.63	13.63	38.75	16.00	25.38	25.38	17.13	13.25	38.38	15.50	26.25	26.25
	18 AF	23.00	38.88	19.25	18.88	22.00	23.13	14.63	38.75	19.25	19.00	22.13	22.63	14.13	38.38	18.75	19.88	23.13
30	25 FC	7.13	47.50	14.50	31.63	31.63	8.38	16.50	47.38	14.50	31.75	31.75	8.00	16.00	47.00	14.00	32.75	32.75
	22 FC	12.13	47.50	18.00	28.25	28.25	13.50	14.75	47.38	17.88	28.38	28.38	13.00	14.38	47.00	17.38	29.25	29.25
	20 FC	16.50	47.50	21.00	25.13	25.13	17.63	13.63	47.38	20.88	25.38	25.38	17.13	13.25	47.00	20.38	26.25	26.25
	25 AF	7.13	47.50	14.50	31.63	31.63	8.38	16.50	47.38	14.50	31.75	31.75	8.00	16.00	47.00	14.00	32.75	32.75
	22 AF	12.13	47.50	18.00	28.25	28.25	13.50	14.75	47.38	17.88	28.38	28.38	13.00	14.38	47.00	17.38	29.25	29.25
	20 AF	16.50	47.50	21.00	25.13	25.13	17.63	13.63	47.38	20.88	25.38	25.38	17.13	13.25	47.00	20.38	26.25	26.25

Figure 70. Belt-Driven Plenum Fan

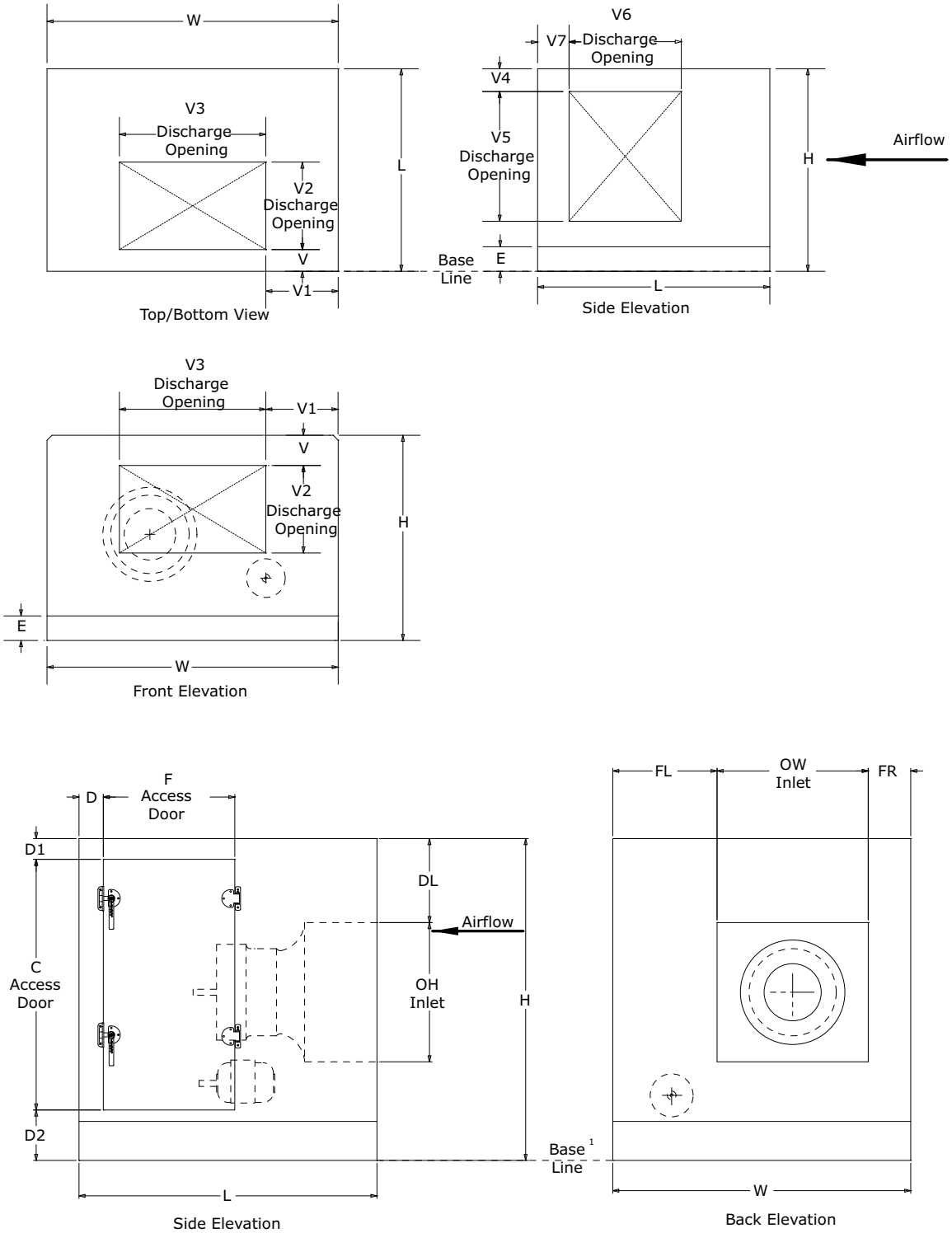

Table 125.Belt-drive plenum fan dimensions

Unit Size	Fan Size	W	L	H	E	Door Dimensions C	F	D	D1	D2	Inlet Dimension OH	OW	DL	FR	FL
3	11 BC	31.50	36.00	29.00	4.50	22.25	13.75	3.13	2.63	4.25	14.25	14.25	6.13	11.25	6.00
	10 BC										12.75	12.75	7.63	12.25	6.50
4	12 AF	44.00	41.00	29.00	4.50	22.25	18.75	3.13	2.63	4.25	16.13	16.13	4.25	14.00	14.00
	11 BC										14.25	14.25	6.13	14.88	14.88
6	16 AF	44.00	41.00	35.25	4.50	28.50	16.75	3.13	2.63	4.25	20.38	20.38	6.25	11.88	11.88
	14 AF										18.13	18.13	8.50	13.00	13.00
8	16 AF	50.50	44.00	37.75	4.50	31.00	18.75	3.13	2.63	4.25	20.38	20.38	8.75	15.13	15.13
	14 AF										18.13	18.13	11.00	16.25	16.25
10	18 AF	61.50	42.50	37.75	4.50	31.00	17.25	3.13	2.63	4.25	22.88	22.88	6.63	8.63	30.00
	16 AF										20.38	20.38	9.13	9.38	31.75
12	20 AF	66.50	42.50	41.50	4.50	34.75	17.25	3.13	2.63	4.25	25.50	25.50	7.75	8.88	32.25
	18 AF										22.88	22.88	10.38	8.63	35.00
14	22 AF	72.00	42.50	41.50	4.50	34.75	17.25	3.13	2.63	4.25	28.50	28.50	4.75	8.63	34.88
	20 AF										25.50	25.50	7.75	11.63	34.88
17	25 AF	72.00	44.00	49.00	4.50	42.25	17.75	3.13	2.63	4.25	32.00	32.00	8.75	8.63	31.38
	22 AF										28.50	28.50	12.25	8.88	34.63
21	28 AF	80.00	50.25	52.75	4.50	46.00	22.00	3.13	2.63	4.25	35.75	35.75	8.00	9.63	34.75
	25 AF										32.00	32.00	11.75	8.63	39.38
25	28 AF	80.00	56.50	61.50	4.50	54.75	26.75	3.13	2.63	4.25	35.75	35.75	16.75	9.63	34.75
	25 AF										32.00	32.00	20.50	8.63	39.38
30	32 AF	93.50	56.50	61.50	4.50	54.75	26.75	3.13	2.63	4.25	40.25	40.25	12.25	10.75	42.50
	28 AF										35.75	35.75	16.75	15.25	42.50

Note: **1** Base line includes standard 2.5-inch integral base frame.

Table 126.Belt-drive plenum fan rectangular opening dimensions

Unit Size	Fan Size	Standard Front / Top / Bottom Openings				Standard Side Openings				Front Full Face			Top Full Face			Side Full Face			
		V	V1	V2	V3	V4	V5	V6	V7	V1	V2	V3	V1	V2	V3	V4	V5	V6	V7
3	11 BC	4.13	8.75	11.00	14.00	4.50	11.00	13.14	16.50	5.50	18.38	20.50	5.50	27.75	20.50	4.50	18.00	15.38	16.50
	10 BC	4.13	8.75	11.00	14.00	4.50	11.00	13.14	16.50	5.50	18.38	20.50	5.50	27.75	20.50	4.50	18.00	15.38	16.50
4	12 AF	4.13	12.00	11.00	20.00	4.50	12.00	15.00	16.50	5.50	18.38	33.00	5.50	32.75	33.00	4.50	18.00	20.38	16.50
	11 BC	4.13	12.00	11.00	20.00	4.50	12.00	15.00	16.50	5.50	18.38	33.00	5.50	32.75	33.00	4.50	18.00	20.38	16.50
6	16 AF	4.13	11.50	15.00	21.00	4.50	17.00	18.00	16.50	5.50	24.63	33.00	5.50	32.75	33.00	4.50	24.25	20.38	16.50
	14 AF	4.13	11.50	15.00	21.00	4.50	17.00	18.00	16.50	5.50	24.63	33.00	5.50	32.75	33.00	4.50	24.25	20.38	16.50
8	16 AF	4.13	13.25	16.00	24.00	4.50	19.00	19.00	16.50	5.50	27.13	39.50	5.50	35.75	39.50	4.50	26.75	22.00	18.88
	14 AF	4.13	13.25	16.00	24.00	4.50	19.00	19.00	16.50	5.50	27.13	39.50	5.50	35.75	39.50	4.50	26.75	22.00	18.88
10	18 AF	4.13	15.75	16.00	30.00	4.50	22.00	22.00	4.13	5.50	27.13	50.50	5.50	34.25	50.50	4.50	26.75	34.25	4.13
	16 AF	4.13	15.75	16.00	30.00	4.50	22.00	22.00	4.13	5.50	27.13	50.50	5.50	34.25	50.50	4.50	26.75	34.25	4.13
12	20 AF	4.13	17.25	18.00	32.00	4.50	25.00	23.00	4.13	5.50	30.88	55.50	5.50	34.25	55.50	4.50	30.50	34.25	4.13
	18 AF	4.13	17.25	18.00	32.00	4.50	25.00	23.00	4.13	5.50	30.88	55.50	5.50	34.25	55.50	4.50	30.50	34.25	4.13
14	22 AF	4.13	17.50	19.00	37.00	4.50	27.00	25.00	4.13	5.50	30.88	61.00	5.50	34.25	61.00	4.50	30.50	34.25	4.13
	20 AF	4.13	17.50	19.00	37.00	4.50	27.00	25.00	4.13	5.50	30.88	61.00	5.50	34.25	61.00	4.50	30.50	34.25	4.13
17	25 AF	4.13	17.50	23.00	37.00	4.50	32.00	25.00	4.13	5.50	38.38	61.00	5.50	35.75	61.00	4.50	38.00	35.75	4.13
	22 AF	4.13	17.50	23.00	37.00	4.50	32.00	25.00	4.13	5.50	38.38	61.00	5.50	35.75	61.00	4.50	38.00	35.75	4.13
21	28 AF	4.13	19.50	25.00	41.00	4.50	39.00	26.00	4.13	5.50	42.13	69.00	5.50	42.00	69.00	4.50	41.75	42.00	4.13
	25 AF	4.13	19.50	25.00	41.00	4.50	39.00	26.00	4.13	5.50	42.13	69.00	5.50	42.00	69.00	4.50	41.75	42.00	4.13
25	28 AF	4.13	19.50	30.00	41.00	4.50	39.00	30.00	4.13	5.50	50.88	69.00	5.50	48.25	69.00	4.50	50.50	48.25	4.13
	25 AF	4.13	19.50	30.00	41.00	4.50	39.00	30.00	4.13	5.50	50.88	69.00	5.50	48.25	69.00	4.50	50.50	48.25	4.13
30	32 AF	4.13	22.25	30.00	49.00	4.50	43.00	34.00	4.13	5.50	50.88	82.50	5.50	48.25	82.50	4.50	50.50	48.25	4.13
	28 AF	4.13	22.25	30.00	49.00	4.50	43.00	34.00	4.13	5.50	50.88	82.50	5.50	48.25	82.50	4.50	50.50	48.25	4.13

Note: 1 Base line includes standard 2.5-inch integral base frame.

Figure 71. Belt-drive plenum fan with round openings

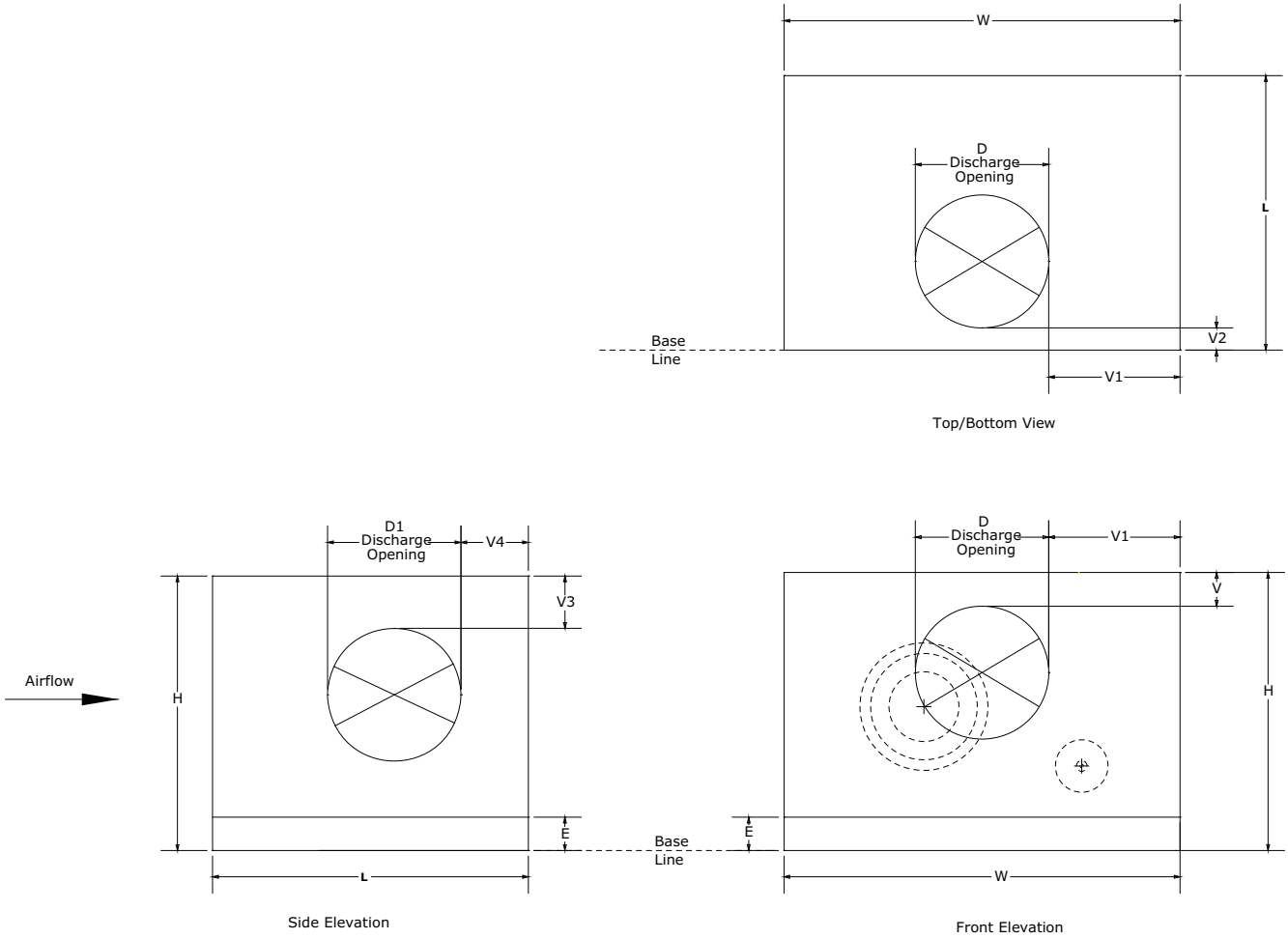

Table 127. Belt-Drive Plenum Fan Dimensions

Unit Size	Fan Size	W	L	H	Door Dimensions C	F	D	D1	D2	Inlet Dimension OH	OW	DL	FR	FL
3	11 BC	31.50	36.00	29.00	22.25	13.75	3.13	2.63	4.25	14.25	14.25	6.25	6.00	11.25
	10 BC									12.75	12.75	7.25	6.50	12.25
4	12 AF	44.00	41.00	29.00	22.25	18.75	3.13	2.63	4.25	16.13	16.13	4.38	14.00	14.00
	11 BC									14.25	14.25	6.25	14.88	14.88
6	16 AF	44.00	41.00	35.25	28.50	16.75	3.13	2.63	4.25	20.38	20.38	6.38	11.88	11.88
	14 AF									18.13	18.13	8.63	13.00	13.00
8	16 AF	50.50	44.00	37.75	31.00	18.75	3.13	2.63	4.25	20.38	20.38	8.88	15.13	15.13
	14 AF									18.13	18.13	11.13	16.25	16.25
10	18 AF	61.50	42.50	37.75	31.00	17.25	3.13	2.63	4.25	22.88	22.88	6.75	8.63	30.00
	16 AF									20.38	20.38	9.25	9.38	31.88
12	20 AF	66.50	42.50	41.50	34.75	17.25	3.13	2.63	4.25	25.50	25.50	7.88	9.00	32.13
	18 AF									22.88	22.88	10.50	8.63	35.00
14	22 AF	72.00	42.50	41.50	34.75	17.25	3.13	2.63	4.25	28.50	28.50	4.88	8.75	34.88
	20 AF									25.50	25.50	7.88	11.25	35.38
17	25 AF	72.00	44.00	49.00	42.25	17.75	3.13	2.63	4.25	32.00	32.00	8.88	8.63	31.38
	22 AF									28.50	28.50	12.38	8.75	34.88
21	28 AF	80.00	50.25	52.75	46.00	22.00	3.13	2.63	4.25	35.75	35.75	8.00	9.63	34.75
	25 AF									32.00	32.00	11.75	8.63	39.38
25	28 AF	80.00	56.50	61.50	54.75	26.75	3.13	2.63	4.25	35.75	35.75	16.75	9.63	34.75
	25 AF									32.00	32.00	20.50	8.63	39.38
30	32 AF	93.50	56.50	61.50	54.75	26.75	3.13	2.63	4.25	40.25	40.25	12.25	10.75	42.50
	28 AF									35.75	35.75	16.75	15.25	42.50

Table 128.Belt-drive plenum fan round opening dimensions

		Front/Top/Bottom				Side		
Unit Size	Fan Size	D	V	V1	V2	D1	V3	V4
3	11 BC	13.00	4.13	9.25	4.13	13.00	4.50	16.50
	10 BC	13.00	4.13	9.25	4.13	13.00	4.50	16.50
4	12 AF	16.00	4.13	14.00	4.13	16.00	4.50	16.50
	11 BC	16.00	4.13	14.00	4.13	16.00	4.50	16.50
6	16 AF	20.00	4.13	12.00	4.13	20.00	4.50	16.50
	14 AF	20.00	4.13	12.00	4.13	20.00	4.50	16.50
8	16 AF	22.00	4.13	14.25	4.13	22.00	4.50	18.88
	14 AF	22.00	4.13	14.25	4.13	22.00	4.50	18.88
10	18 AF	24.00	4.13	18.75	4.13	24.00	4.50	4.13
	16 AF	24.00	4.13	18.75	4.13	24.00	4.50	4.13
12	20 AF	28.00	4.13	19.25	4.13	28.00	4.50	4.13
	18 AF	28.00	4.13	19.25	4.13	28.00	4.50	4.13
14	22 AF	30.00	4.13	21.00	4.13	30.00	4.50	4.13
	20 AF	30.00	4.13	21.00	4.13	30.00	4.50	4.13
17	25 AF	32.00	4.13	20.00	4.13	32.00	4.50	4.13
	22 AF	32.00	4.13	20.00	4.13	32.00	4.50	4.13
21	28 AF	34.00	4.13	23.00	4.13	34.00	4.50	4.13
	25 AF	34.00	4.13	23.00	4.13	34.00	4.50	4.13
25	28 AF	38.00	4.13	21.00	4.13	38.00	4.50	4.13
	25 AF	38.00	4.13	21.00	4.13	38.00	4.50	4.13
30	32 AF	42.00	4.13	25.75	4.13	42.00	4.50	4.13
	28 AF	42.00	4.13	25.75	4.13	42.00	4.50	4.13

Figure 72. Fan Access Door Location

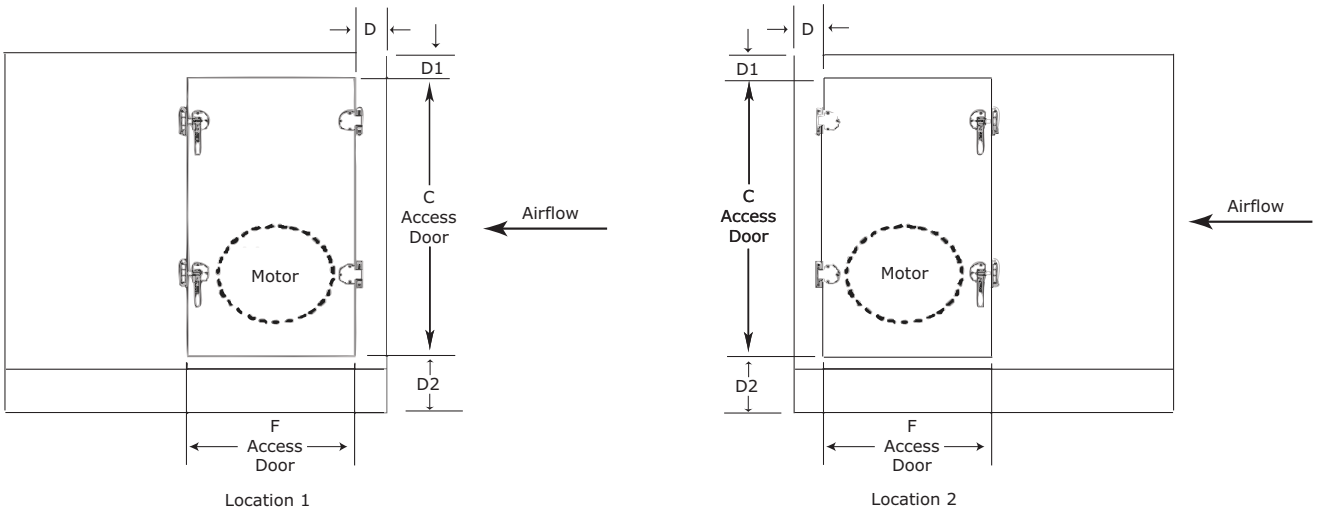

Table 129.Fan type, orientation and access door location

Unit Size	Fan Type	Fan Orientation	Access Door Location
3-8	Housed Fan	FTTP,BKTP,TPFT,BTFT	Location 1
		TPBK,BTBK	Location 2
	BD Plenum Fan	ALL	Location 2
10-30	Housed Fan	FTTP,BKTP,TPBK,BTBK	Location 1
		TPFT,BTFT	Location 2
	BD Plenum Fan	ALL	Location 2

Filters

Filter Sizes

Table 130.Filter sizes

Unit Size	2-inch and 4-inch Angled Filter	Side Load Bag/ Cartridge Filter[1]	2-inch/4-inch Combination Flat Filter	2-inch and 4-inch Flat Filter
3	2 - 16x25	1 - 20x24	1 - 20x25	1 - 20x25
4	4 - 16x20	2 - 20x20	2 - 20x20	2 - 20x20
6	4 - 16x20	2 - 24x20	2 - 20x25	2 - 20x25
8	4 - 20x20	4 - 24x12	1 - 24x20 1 - 24x24	1 - 24x20 1 - 24x24
10	4 - 25x20	2 - 24x20 1 - 24x12	2 - 20x25 1 - 16x25	2 - 20x25 1 - 16x25
12	6 - 20x20	3 - 20x20 2 - 12x24	6 - 16x20	6 - 16x20
14	2 - 20x25 4 - 20x20	2 - 20x24 1 - 20x20 2 - 12x24	4 - 16x20 2 - 16x25	4 - 16x20 2 - 16x25
17	4 - 16x25 8 - 16x20	4 - 20x24 2 - 20x20	4 - 20x24 2 - 20x20	4 - 20x24 2 - 20x20
21	12 - 25x16	3 - 24x24 3 - 20x24	3 - 25x20 1 - 25x16 3 - 16x25	3 - 25x20 1 - 25x16 3 - 16x25
25	18 - 25x16	6 - 20x24 3 - 12x24	6 - 20x20 2 - 20x16 3 - 12x24	6 - 20x20 2 - 20x16 3 - 12x24
30	6 - 16x25 18 - 16x20	8 - 20x20 3 - 12x24	6 - 20x24 2 - 20x16 3 - 12x24	6 - 20x24 2 - 20x16 3 - 12x24

Note: 1 2-inch pre-filters are the same size as those indicated for the bag and cartridge filters.

2-inch and 4-inch Angled Filters

Figure 73. 2-inch and 4-inch Angled filter section

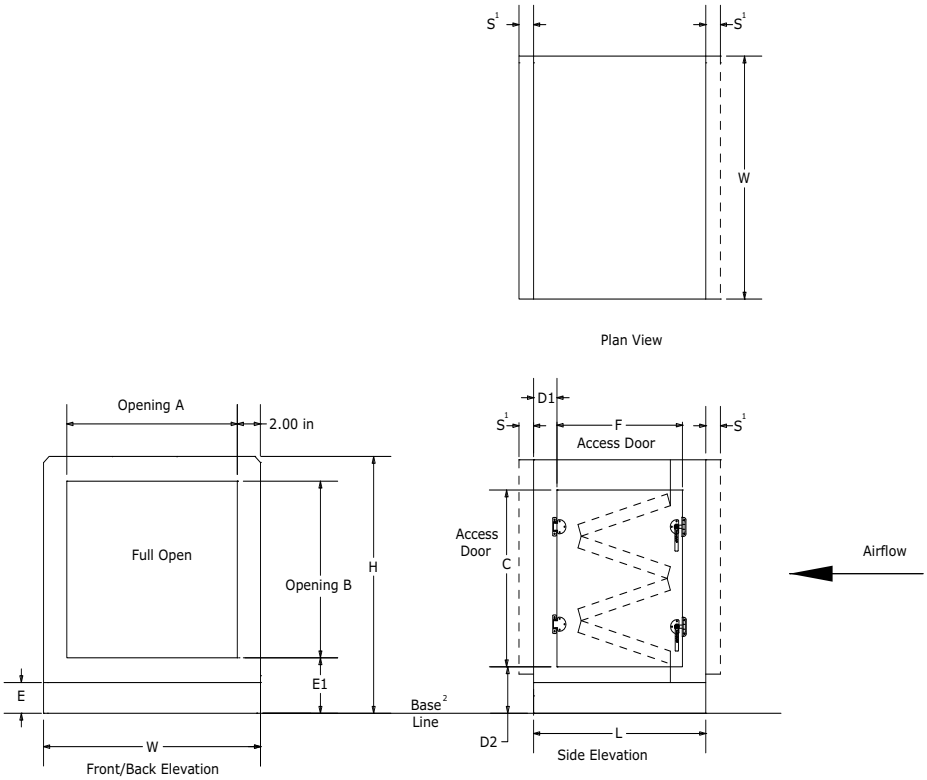

Table 131.2-inch and 4-inch Angled filter dimensions (inches)

Unit Size	W	H	L	Front/Back Opening A	Front/Back Opening B	Outward Door C	Outward Door F	Outward Door D1	Outward Door D2	Base2 E	Base2 E1	Shipping Split Overlap S1
3	31.50	29.00	24.50	27.50	22.50	22.25	20.38	2.13	4.25	2.50	4.50	1.00
4	44.00	29.00	24.50	40.00	22.50	22.25	20.38	2.13	4.25	2.50	4.50	1.00
6	44.00	35.25	24.50	40.00	28.75	28.50	20.38	2.13	4.25	2.50	4.50	1.00
8	50.50	37.75	26.50	46.50	31.25	31.00	22.38	2.13	4.25	2.50	4.50	1.00
10	61.50	37.75	26.50	57.50	31.25	31.00	22.38	2.13	4.25	2.50	4.50	1.00
12	66.50	41.50	26.50	62.50	35.00	34.75	22.38	2.13	4.25	2.50	4.50	1.00
14	72.00	41.50	26.50	68.00	35.00	34.75	22.38	2.13	4.25	2.50	4.50	1.00
17	72.00	49.00	24.50	68.00	42.50	42.25	20.38	2.13	4.25	2.50	4.50	1.00
21	80.00	52.75	24.50	76.00	46.25	46.00	20.38	2.13	4.25	2.50	4.50	1.00
25	80.00	61.50	24.50	76.00	55.00	54.75	20.38	2.13	4.25	2.50	4.50	1.00
30	93.50	61.50	24.50	89.50	55.00	54.75	20.38	2.13	4.25	2.50	4.50	1.00

Note: **1** Shipping split flange dimension is for shipping and installation planning purposes only and does not add to installed overall unit length. **2** Base line includes the height for standard 2.5-inch integral base frame.

Figure 74. 2-inch and 4-inch Angled filter placement

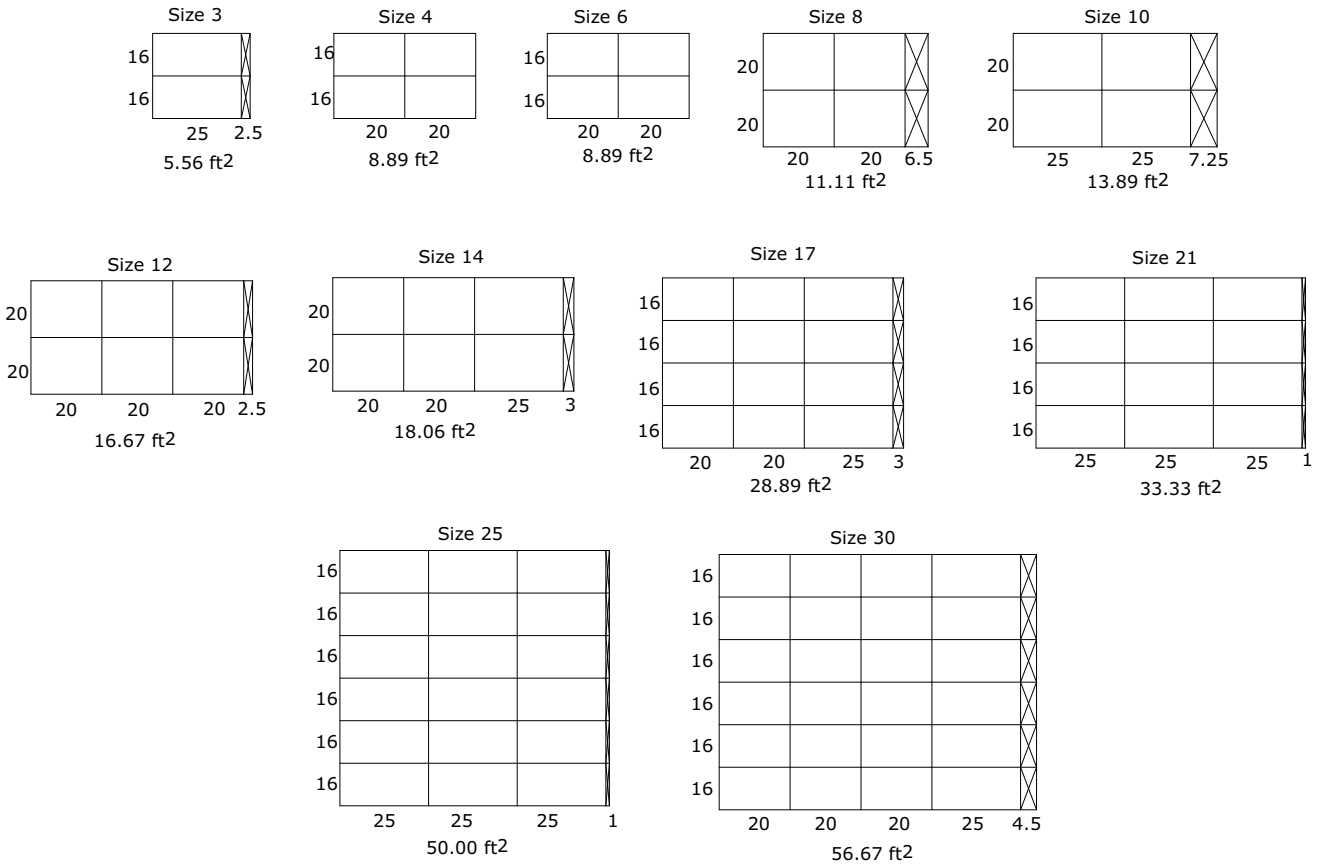

Bag Filters

Long Bag Filters

Figure 75. Long bag filter section

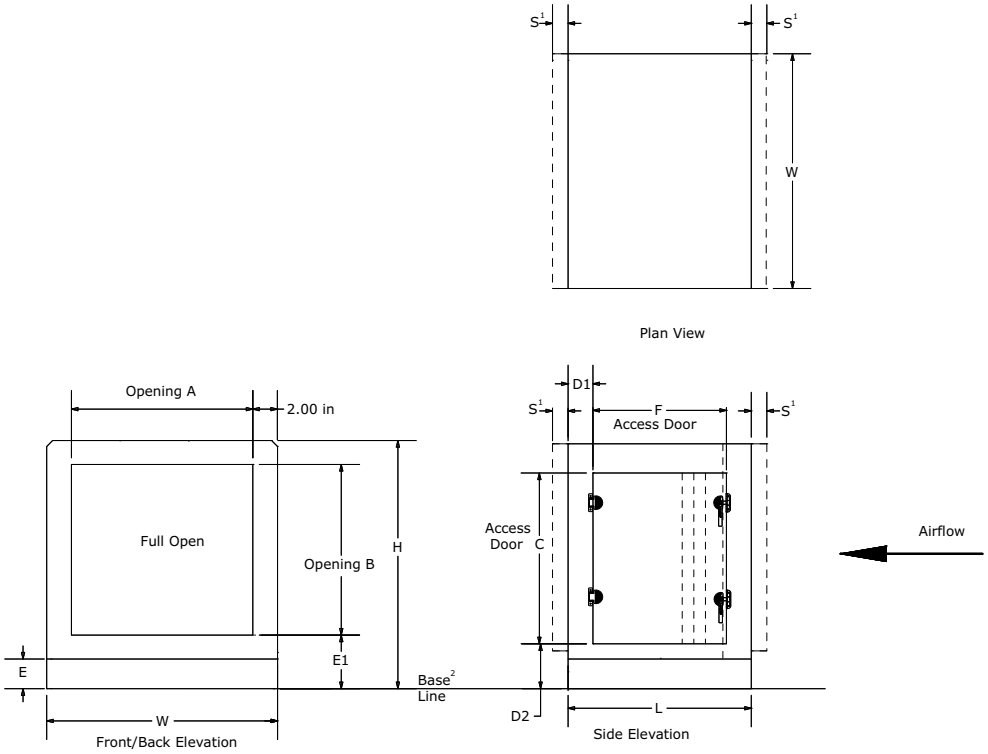

Table 132.Long Bag Filter section dimensions

Unit Size	W	H	L	Front/Back Opening A	Front/Back Opening B	Outward Door C	Outward Door F	Outward Door D1	Outward Door D2	Base[2] E	Base[2] E1	Shipping Split Overlap S[1]
3	31.50	29.00	36.00	27.50	22.50	22.25	29.00	4.87	4.25	2.50	4.50	1.00
4	44.00	29.00	41.00	40.00	22.50	22.25	29.00	9.88	4.25	2.50	4.50	1.00
6	44.00	35.25	41.00	40.00	28.75	28.50	29.00	9.88	4.25	2.50	4.50	1.00
8	50.50	37.75	44.00	46.50	31.25	31.00	31.00	10.88	4.25	2.50	4.50	1.00
10	61.50	37.75	42.50	57.50	31.25	31.00	31.00	9.38	4.25	2.50	4.50	1.00
12	66.50	41.50	42.50	62.50	35.00	34.75	31.00	9.38	4.25	2.50	4.50	1.00
14	72.00	41.50	42.50	68.00	35.00	34.75	31.00	9.375	4.25	2.50	4.50	1.00
17	72.00	49.00	44.00	68.00	42.50	42.25	31.00	10.88	4.25	2.50	4.50	1.00
21	80.00	52.75	50.25	76.00	46.25	46.00	29.00	19.13	4.25	2.50	4.50	1.00
25	80.00	61.50	46.00	76.00	55.00	54.75	31.00	12.88	4.25	2.50	4.50	1.00
30	93.50	61.50	46.00	89.50	55.00	54.75	31.00	12.88	4.25	2.50	4.50	1.00

Note: **1** Shipping split flange dimension is for shipping and installation planning purposes only and does not add to installed overall unit length. **2** Base line includes the height for standard 2.5-inch integral base frame.

Figure 76. SLong Bag Filter placement

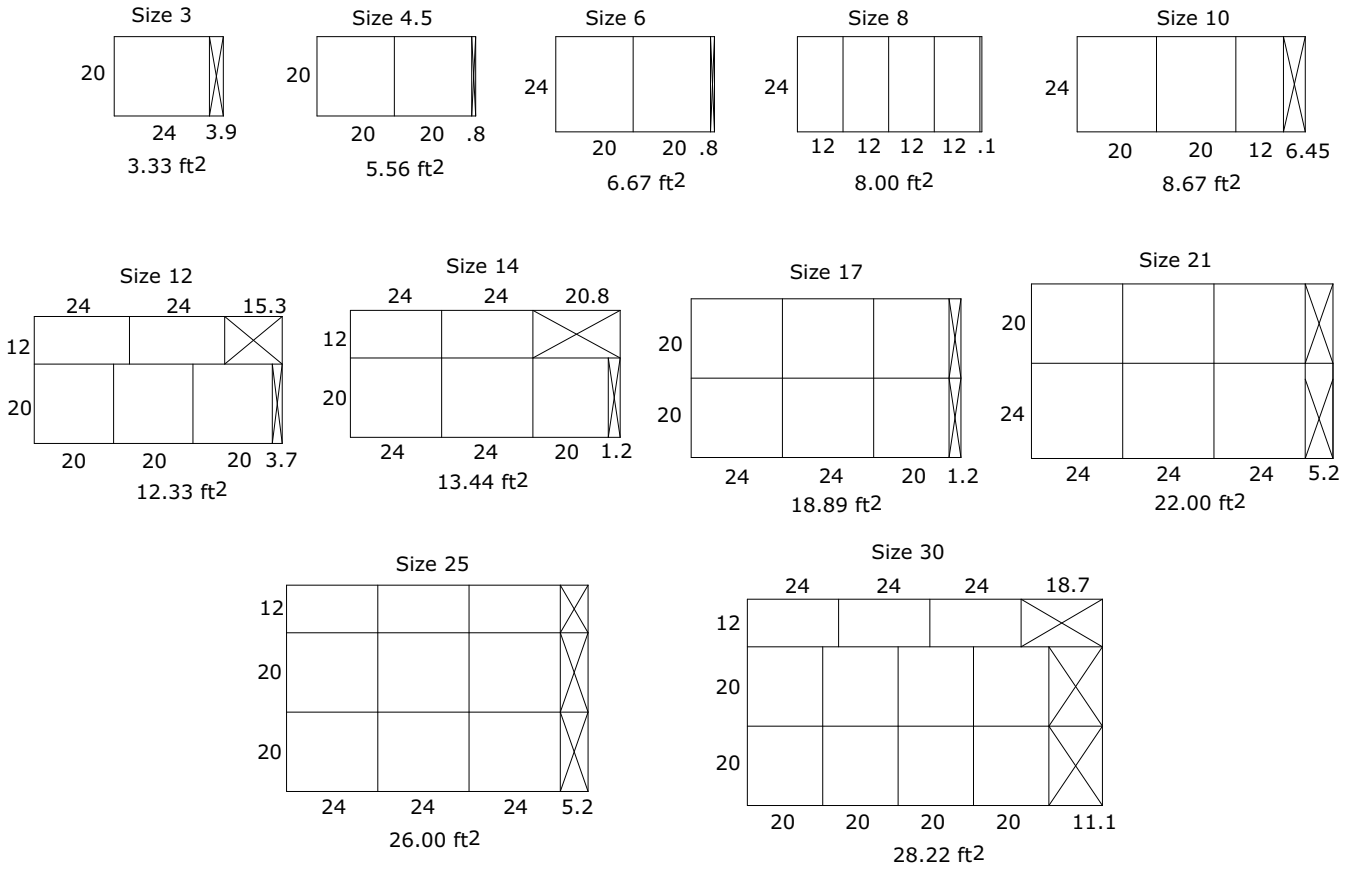

Short Bag Filter section

Figure 77. Short bag filter section

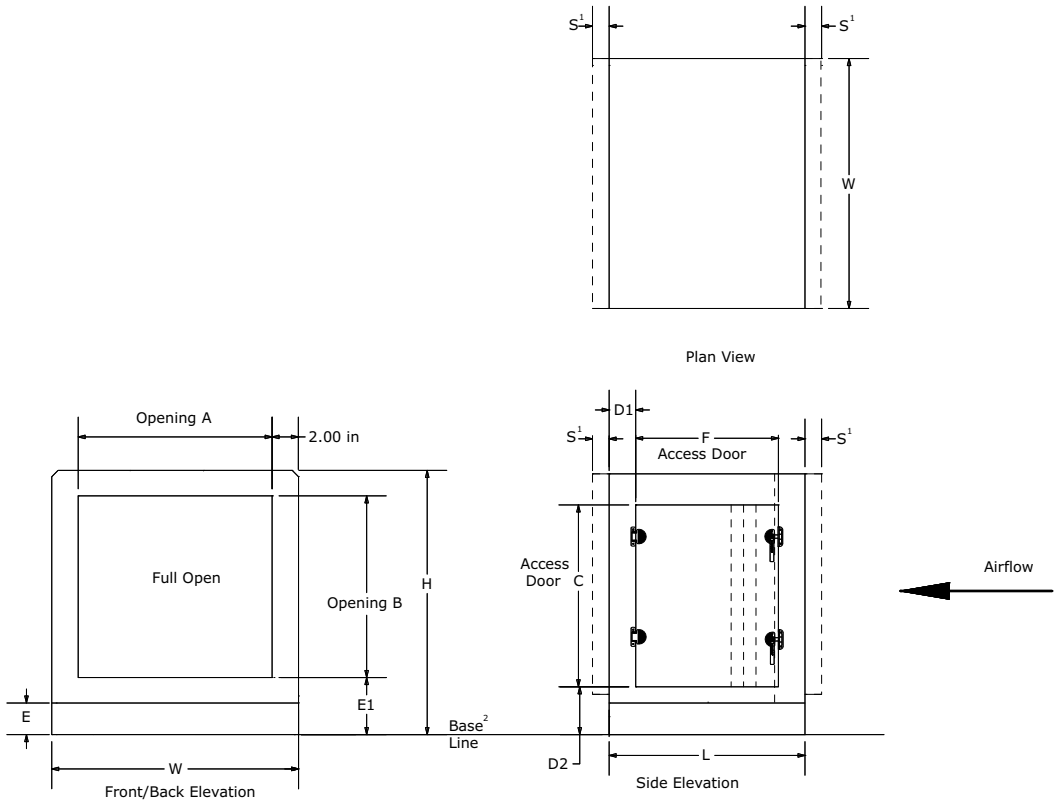

Table 133.Short Bag filter section dimensions

Unit Size	W	H	L	Front / Back Opening A	Front / Back Opening B	Outward Door C	Outward Door F	Outward Door D1	Outward Door D2	Base[2] E	Base[2] E1	Shipping Split Overlap S[1]
3	31.50	29.00	24.50	27.50	22.50	22.25	20.38	2.13	4.25	2.50	4.50	1.00
4	44.00	29.00	24.50	40.00	22.50	22.25	20.38	2.13	4.25	2.50	4.50	1.00
6	44.00	35.25	24.50	40.00	28.75	28.50	20.38	2.13	4.25	2.50	4.50	1.00
8	50.50	37.75	26.50	46.50	31.25	31.00	22.38	2.13	4.25	2.50	4.50	1.00
10	61.50	37.75	26.50	57.50	31.25	31.00	22.38	2.13	4.25	2.50	4.50	1.00
12	66.50	41.50	26.50	62.50	35.00	34.75	22.38	2.13	4.25	2.50	4.50	1.00
14	72.00	41.50	26.50	68.00	35.00	34.75	22.38	2.13	4.25	2.50	4.50	1.00
17	72.00	49.00	24.50	68.00	42.50	42.25	20.38	2.13	4.25	2.50	4.50	1.00
21	80.00	52.75	24.50	76.00	46.25	46.00	20.38	2.13	4.25	2.50	4.50	1.00
25	80.00	61.50	24.50	76.00	55.00	54.75	20.38	2.13	4.25	2.50	4.50	1.00
30	93.50	61.50	24.50	89.50	55.00	54.75	20.38	2.13	4.25	2.50	4.50	1.00

Note: **1** Shipping split flange dimension is for shipping and installation planning purposes only and does not add to installed overall unit length. **2** Base line includes the height for standard 2.5-inch integral base frame.

Figure 78. Short Bag Filter placement

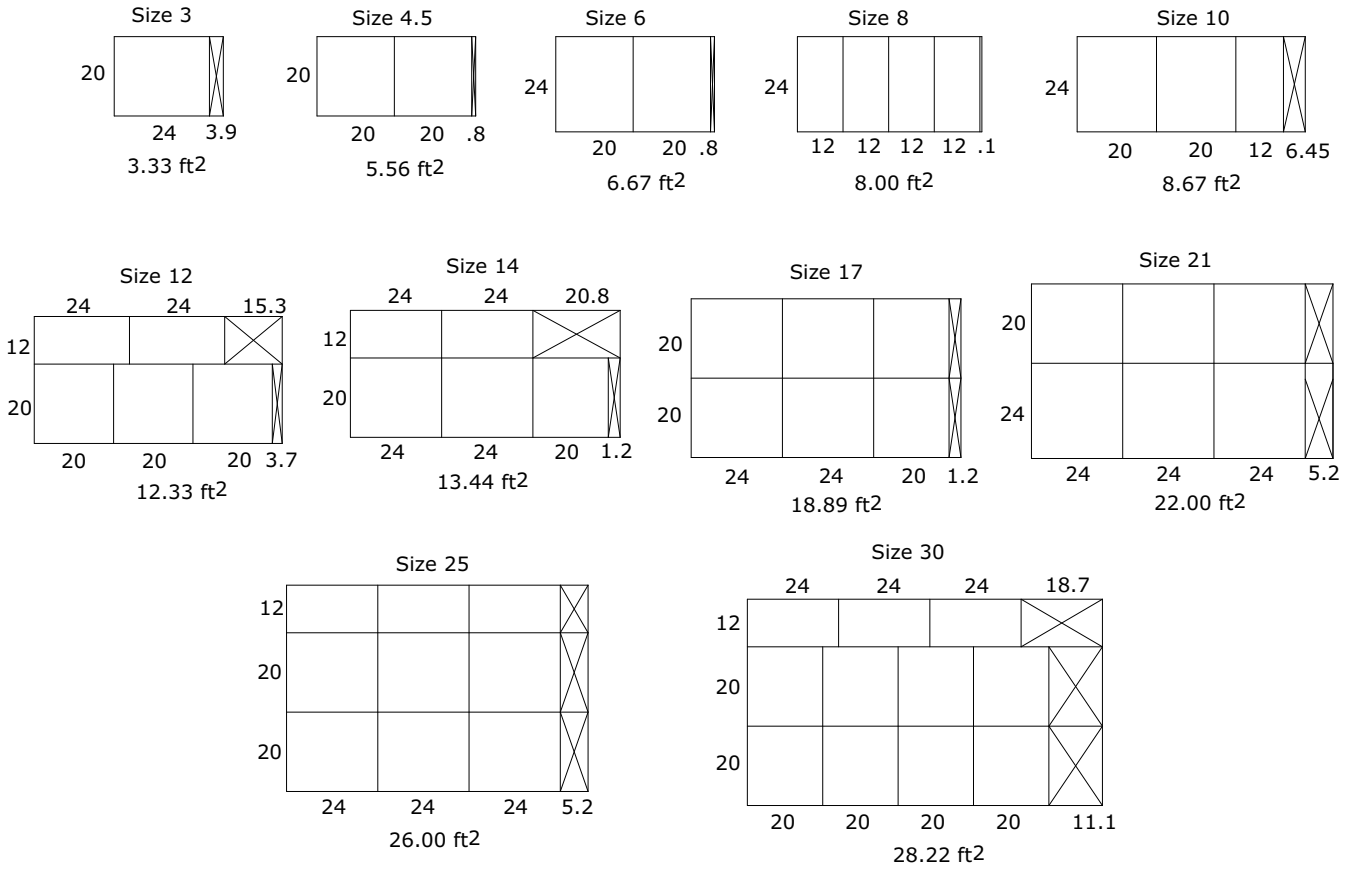

Cartridge Filters

Figure 79. Cartridge filter section

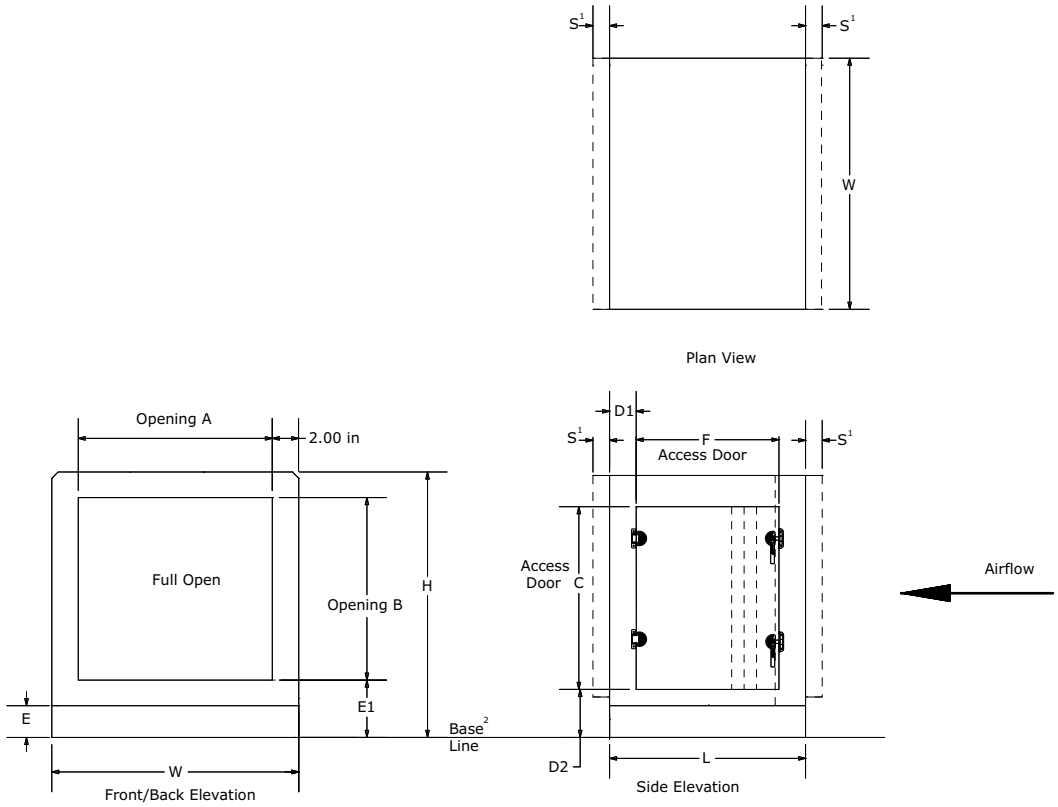

Table 134.Cartridge filter section dimensions

Unit				Front/Back Opening		Outward Door				Base		Shipping Split Overlap
Size	W	H	L	A	B	C	F	D1	D2	E	E1	S[1]
3	31.50	29.00	24.50	27.50	22.50	22.25	20.38	2.13	4.25	2.50	4.50	1.00
4	44.00	29.00	24.50	40.00	22.50	22.25	20.38	2.13	4.25	2.50	4.50	1.00
6	44.00	35.25	24.50	40.00	28.75	28.50	20.38	2.13	4.25	2.50	4.50	1.00
8	50.50	37.75	26.50	46.50	31.25	31.00	22.38	2.13	4.25	2.50	4.50	1.00
10	61.50	37.75	26.50	57.50	31.25	31.00	22.38	2.13	4.25	2.50	4.50	1.00
12	66.50	41.50	26.50	62.50	35.00	34.75	22.38	2.13	4.25	2.50	4.50	1.00
14	72.00	41.50	26.50	68.00	35.00	34.75	22.38	2.13	4.25	2.50	4.50	1.00
17	72.00	49.00	24.50	68.00	42.50	42.25	20.38	2.13	4.25	2.50	4.50	1.00
21	80.00	52.75	24.50	76.00	46.25	46.00	20.38	2.13	4.25	2.50	4.50	1.00
25	80.00	61.50	24.50	76.00	55.00	54.75	20.38	2.13	4.25	2.50	4.50	1.00
30	93.50	61.50	24.50	89.50	55.00	54.75	20.38	2.13	4.25	2.50	4.50	1.00

Note: **1** Shipping split flange dimension is for shipping and installation planning purposes only and does not add to installed overall unit length. **2** Base line includes the height for standard 2.5-inch integral base frame.

Figure 80. Cartridge Filter placement

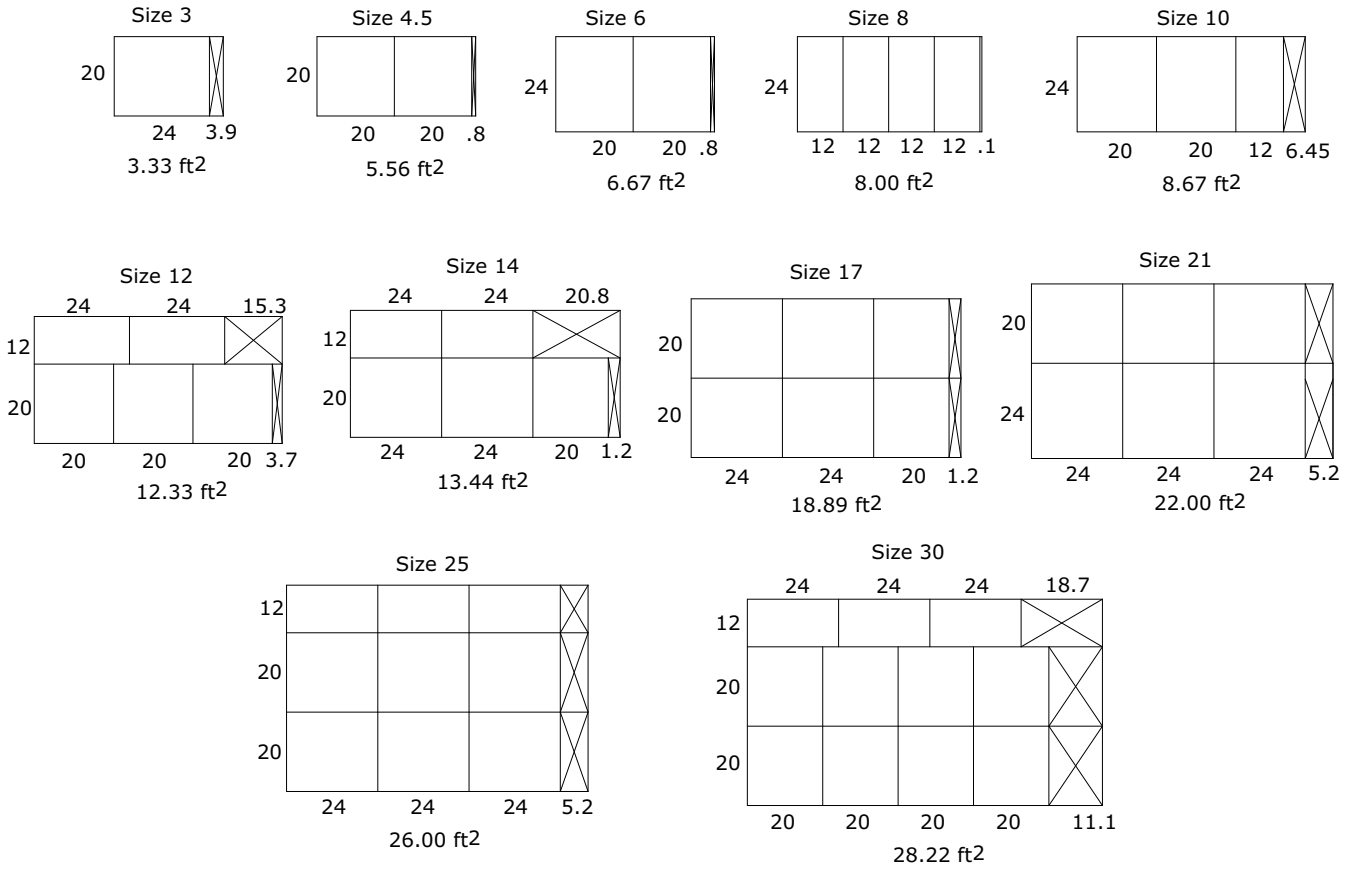

2-inch/4-inch Combination Flat Filter

Figure 81. 2-inch/4-inch Combination flat filter section

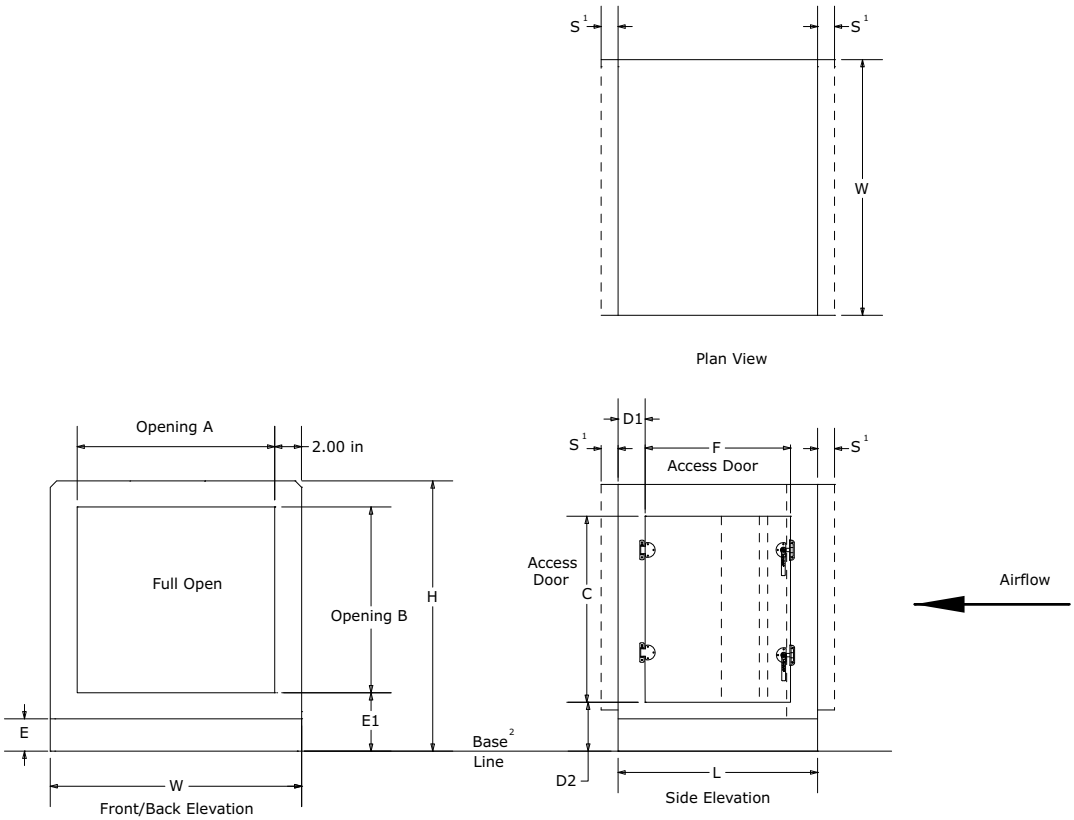

Table 135.2-inch/4-inch Combination Flat Filter section dimensions

Unit Size	W	H	L	Front/Back Opening A	Front/Back Opening B	Outward Door C	Outward Door F	Outward Door D1	Outward Door D2	Base[2] E	Base[2] E1	Shipping Split Overlap S[1]
3	31.50	29.00	19.00	27.50	22.50	22.25	14.88	2.13	4.25	2.50	4.50	1.00
4	44.00	29.00	19.00	40.00	22.50	22.25	14.88	2.13	4.25	2.50	4.50	1.00
6	44.00	35.25	19.00	40.00	28.75	28.50	14.88	2.13	4.25	2.50	4.50	1.00
8	50.50	37.75	19.00	46.50	31.25	31.00	14.88	2.13	4.25	2.50	4.50	1.00
10	61.50	37.75	19.00	57.50	31.25	31.00	14.88	2.13	4.25	2.50	4.50	1.00
12	66.50	41.50	19.00	62.50	35.00	34.75	14.88	2.13	4.25	2.50	4.50	1.00
14	72.00	41.50	19.00	68.00	35.00	34.75	14.88	2.13	4.25	2.50	4.50	1.00
17	72.00	49.00	19.00	68.00	42.50	42.25	14.88	2.13	4.25	2.50	4.50	1.00
21	80.00	52.75	19.00	76.00	46.25	46.00	14.88	2.13	4.25	2.50	4.50	1.00
25	80.00	61.50	19.00	76.00	55.00	54.75	14.88	2.13	4.25	2.50	4.50	1.00
30	93.50	61.50	19.00	89.50	55.00	54.75	14.88	2.13	4.25	2.50	4.50	1.00

Note: **1** Shipping split flange dimension is for shipping and installation planning purposes only and does not add to installed overall unit length. **2** Base line includes the height for standard 2.5-inch integral base frame.

Figure 82. 2-inch/4-inch Combination Flat Filter placement

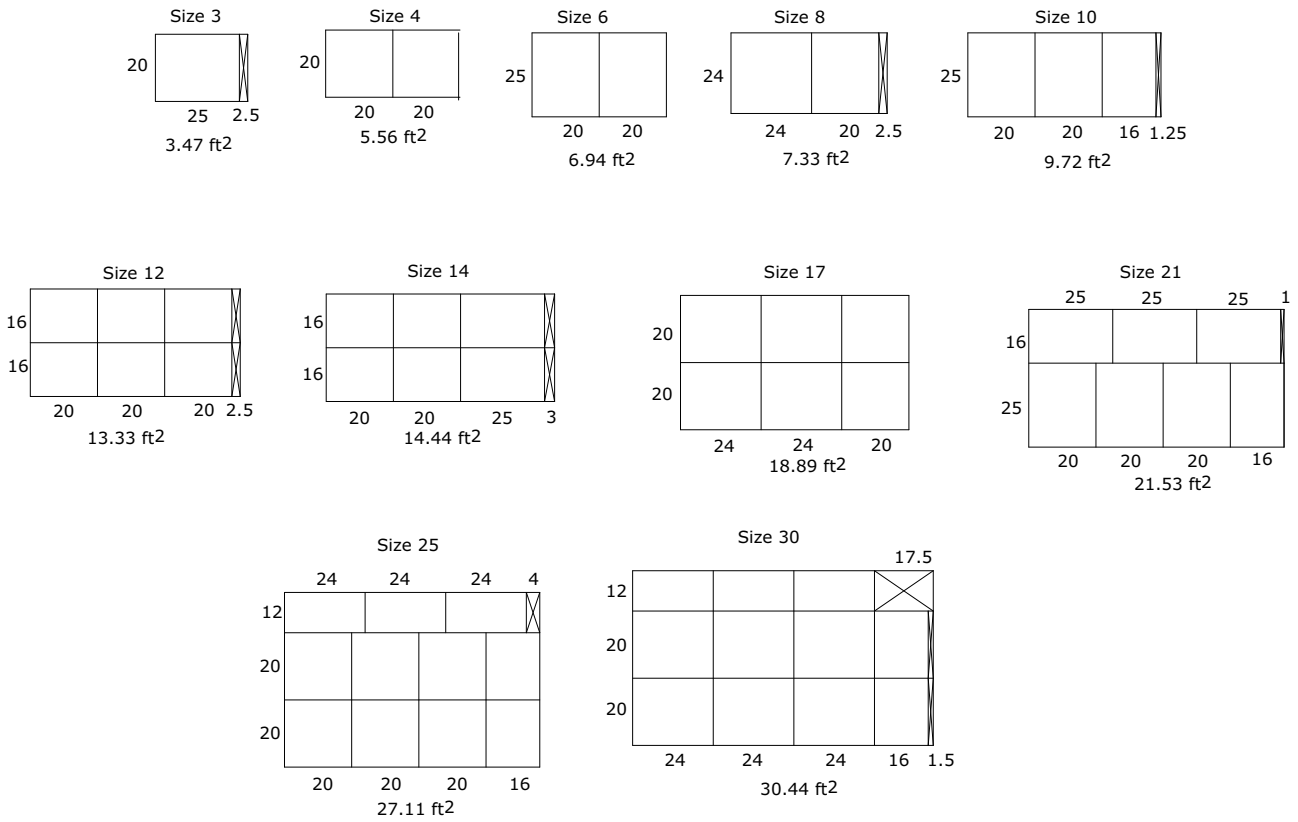

2-inch and 4-inch Flat Filters

Figure 83. 2-inch and 4-inch Flat Filter section

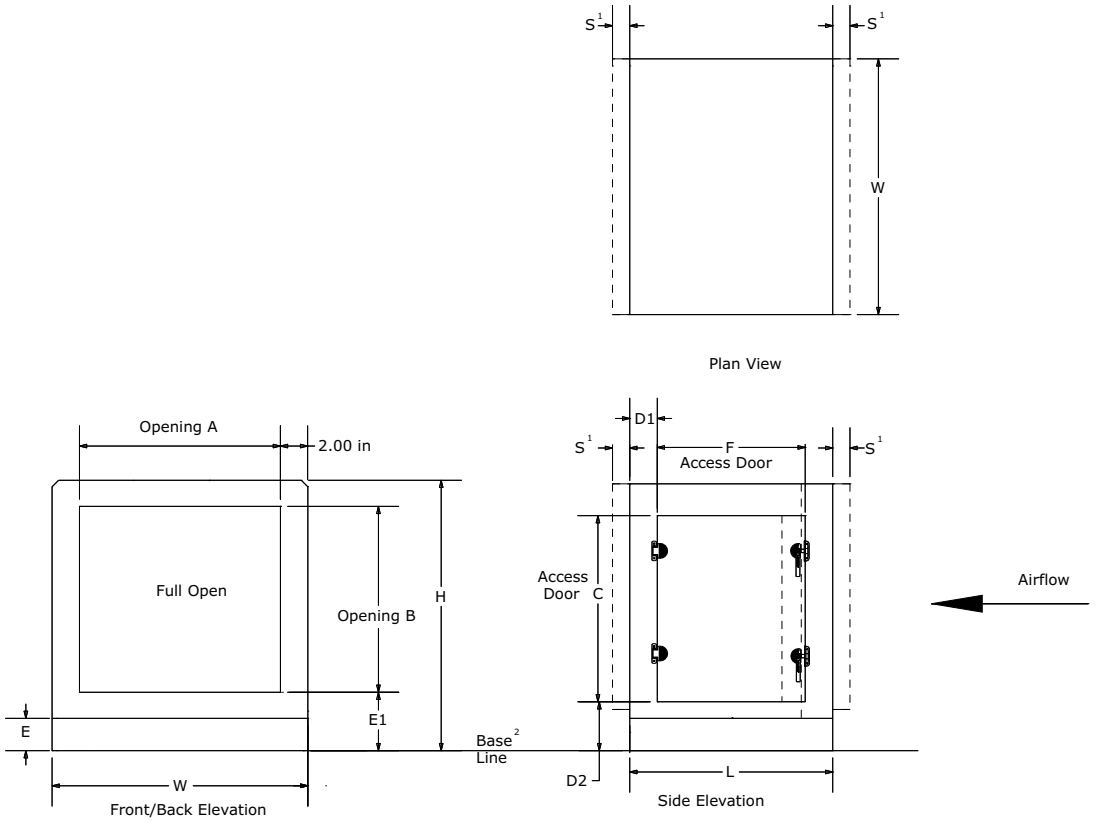

Table 136.2-inch and 4-inch Flat Filter section dimensions

Unit Size	W	H	L	Front/Back Opening A	Front/Back Opening B	Outward Door C	Outward Door F	Outward Door D1	Outward Door D2	Base[2] E	Base[2] E1	Shipping Split Overlap S[1]
3	31.50	29.00	14.00	27.50	22.50	22.25	14.88	2.13	4.25	2.50	4.50	1.00
4	44.00	29.00	14.00	40.00	22.50	22.25	14.88	2.13	4.25	2.50	4.50	1.00
6	44.00	35.25	14.00	40.00	28.75	28.50	14.88	2.13	4.25	2.50	4.50	1.00
8	50.50	37.75	14.00	46.50	31.25	31.00	14.88	2.13	4.25	2.50	4.50	1.00
10	61.50	37.75	14.00	57.50	31.25	31.00	14.88	2.13	4.25	2.50	4.50	1.00
12	66.50	41.50	14.00	62.50	35.00	34.75	14.88	2.13	4.25	2.50	4.50	1.00
14	72.00	41.50	14.00	68.00	35.00	34.75	14.88	2.13	4.25	2.50	4.50	1.00
17	72.00	49.00	14.00	68.00	42.50	42.25	14.88	2.13	4.25	2.50	4.50	1.00
21	80.00	52.75	14.00	76.00	46.25	46.00	14.88	2.13	4.25	2.50	4.50	1.00
25	80.00	61.50	14.00	76.00	55.00	54.75	14.88	2.13	4.25	2.50	4.50	1.00
30	93.50	61.50	14.00	89.50	55.00	54.75	14.88	2.13	4.25	2.50	4.50	1.00

Note: **1** Shipping split flange dimension is for shipping and installation planning purposes only and does not add to installed overall unit length. **2** Base line includes the height for standard 2.5-inch integral base frame.

Figure 84. 2-inch and 4-inch Flat Filter placement

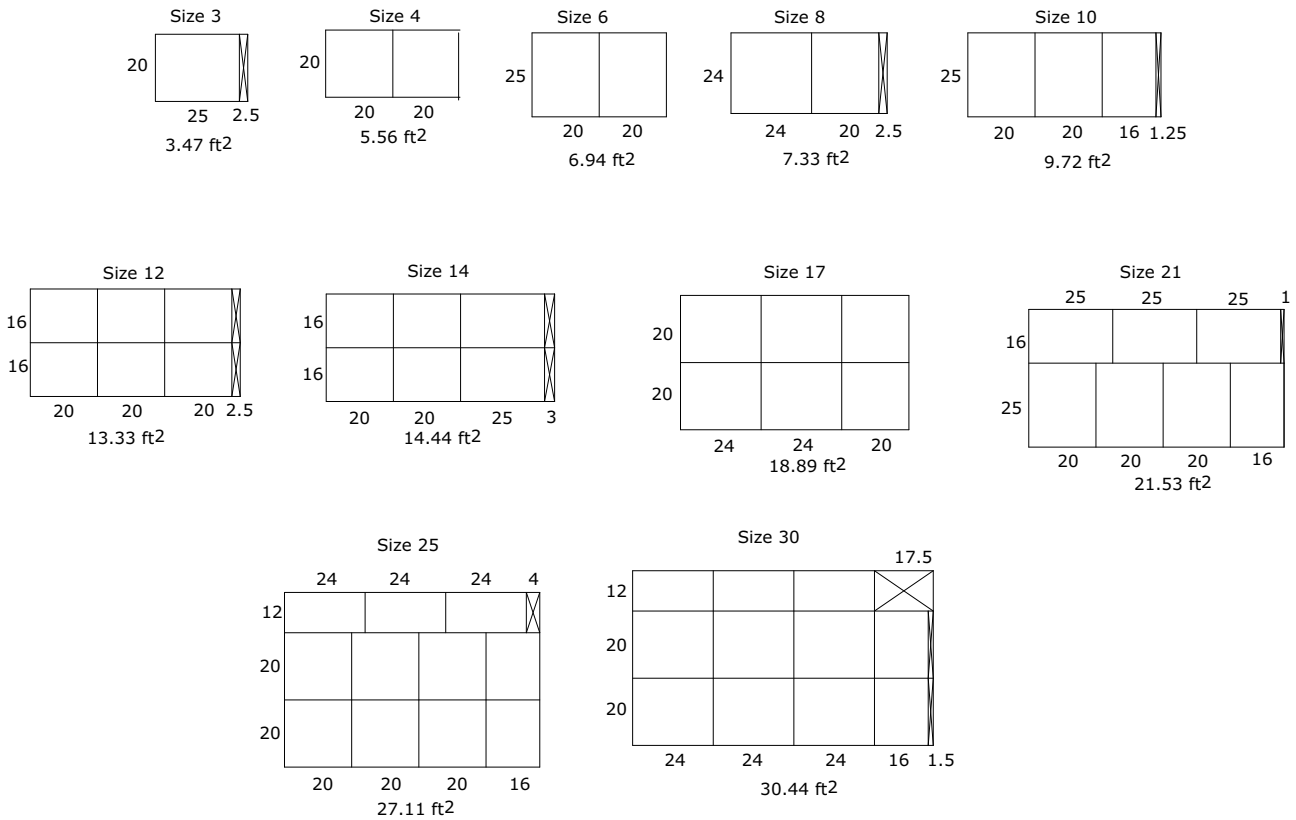

Mixing Box

Figure 85. Mixing box

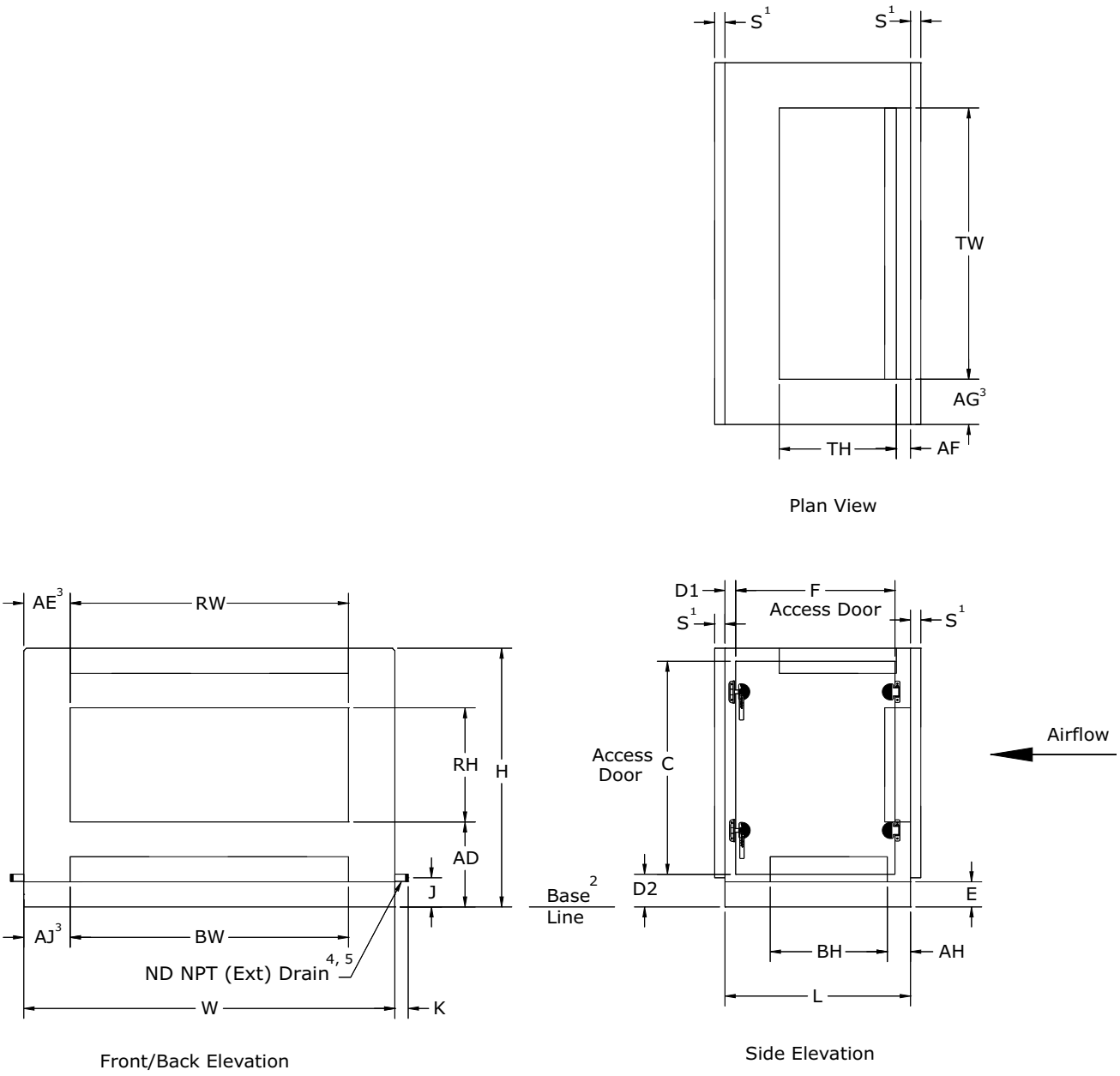

Note: **1** Shipping split flange dimension is for shipping and installation planning purposes only and does not add to installed overall unit length. **2** Base line includes the height for standard 2.5-inch integral base frame. **3** Dimension measured from door side, if doors on both sides, dimension is measured from drive side of unit. **4** Drain pan only available without bottom damper, bottom opening, and filters. **5** Drain pan connection location is L/2.

Table 137. Mixing Box with and without Filters

Unit Size	W	L	H	J	ND	Door without filters C	Door without filters F	Door without filters D1	Door with filters C	Door with filters F	Door with filters D1	D2	E
3	31.50	34.00	29.00	3.38	1.00	22.25	18.75	7.63	22.25	29.00	2.13	4.25	2.50
4	44.00	34.00	29.00	3.38	1.00	22.25	18.75	7.63	22.25	29.00	2.13	4.25	2.50
6	44.00	34.00	35.25	3.38	1.00	28.50	18.75	7.63	28.50	29.00	2.13	4.25	2.50
8	50.50	36.00	37.75	3.38	1.00	31.00	18.75	8.63	31.00	31.00	2.13	4.25	2.50
10	61.50	36.00	37.75	3.38	1.00	31.00	18.75	8.63	31.00	31.00	2.13	4.25	2.50
12	66.50	36.00	41.50	3.38	1.00	34.75	18.75	8.63	34.75	31.00	2.13	4.25	2.50
14	72.00	36.00	41.50	3.38	1.00	34.75	18.75	8.63	34.75	31.00	2.13	4.25	2.50
17	72.00	36.00	49.00	3.38	1.00	42.25	20.38	7.88	42.25	31.00	2.13	4.25	2.50
21	80.00	34.00	52.75	3.38	1.00	46.00	18.75	7.63	46.00	29.00	2.13	4.25	2.50
25	80.00	46.00	61.50	3.38	1.00	54.75	20.38	12.88	54.75	31.00	2.13	4.25	2.50
30	93.50	46.00	61.50	3.38	1.00	54.75	20.38	12.88	54.75	31.00	2.13	4.25	2.50

Table 138. Mixing Box with Airfoil Dampers

Unit Size	Front/Back/Top/Bottom Opening With Airfoil Dampers														
	W	L	H	TH	TW	BH	BW	RH	RW	AD	AE	AF	AG	AH	AJ
3	31.50	34.00	29.00	17.00	16.25	12.00	11.50	17.00	16.25	8.25	7.63	2.50	7.63	4.38	10.00
4	44.00	34.00	29.00	17.00	22.25	12.00	17.50	17.00	22.25	8.25	10.88	2.50	10.88	4.38	13.25
6	44.00	34.00	35.25	17.00	28.25	12.00	23.50	17.00	28.25	10.50	7.88	2.50	7.88	4.38	10.25
8	50.50	36.00	37.75	17.00	37.25	12.00	32.50	17.00	37.25	11.75	6.63	2.50	6.63	4.38	9.00
10	61.50	36.00	37.75	17.00	45.75	12.00	41.00	17.00	45.75	11.75	7.88	2.50	7.88	5.38	10.25
12	66.50	36.00	41.50	17.00	55.50	12.00	50.75	17.00	55.50	13.63	5.50	2.50	5.50	4.38	7.88
14	72.00	36.00	41.50	22.75	44.25	17.75	39.50	22.75	44.25	10.75	13.88	2.50	13.88	4.38	16.25
17	72.00	36.00	49.00	22.75	54.00	17.75	49.25	22.75	54.00	14.50	9.00	2.50	9.00	4.38	11.38
21	80.00	34.00	52.75	22.75	66.00	17.75	61.25	22.75	66.00	16.38	7.00	2.50	7.00	4.38	9.38
25	80.00	46.00	61.50	28.50	61.50	23.50	56.75	28.50	61.50	17.88	9.25	2.50	9.25	4.38	11.63
30	93.50	46.00	61.50	28.50	71.00	23.50	66.25	28.50	71.00	17.88	11.25	2.50	11.25	4.38	13.63

Table 139. Mixing Box without Dampers

Unit Size	All Openings Without Dampers														
	W	L	H	TH	TW	BH	BW	RH	RW	AD	AE	AF	AG	AH	AJ
3	31.50	34.00	29.00	14.50	13.75	12.00	11.50	14.50	13.75	9.50	8.88	3.75	8.88	4.38	10.00
4	44.00	34.00	29.00	14.50	19.75	12.00	17.50	14.50	19.75	9.50	12.13	3.75	12.13	4.38	13.25
6	44.00	34.00	35.25	14.50	25.75	12.00	23.50	14.50	25.75	11.75	9.13	3.75	9.13	4.38	10.25
8	50.50	36.00	37.75	14.50	34.75	12.00	32.50	14.50	34.75	13.00	7.88	3.75	7.88	4.38	9.00
10	61.50	36.00	37.75	14.50	43.25	12.00	41.00	14.50	43.25	13.00	9.13	3.75	9.13	5.38	10.25
12	66.50	36.00	41.50	14.50	53.00	12.00	50.75	14.50	53.00	14.88	6.75	3.75	6.75	4.38	7.88
14	72.00	36.00	41.50	20.25	41.75	17.75	39.50	20.25	41.75	12.00	15.13	3.75	15.13	4.38	16.25
17	72.00	36.00	49.00	20.25	51.50	17.75	49.25	20.25	51.50	15.75	10.25	3.75	10.25	4.38	11.38
21	80.00	34.00	52.75	20.25	63.50	17.75	61.25	20.25	63.50	17.63	8.25	3.75	8.25	4.38	9.38
25	80.00	46.00	61.50	26.00	59.00	23.50	56.75	26.00	59.00	19.13	10.50	3.75	10.50	4.38	11.63
30	93.50	46.00	61.50	26.00	68.50	23.50	66.25	26.00	68.50	19.13	12.50	3.75	12.50	4.38	13.63

Table 140. Mixing Box with Front/Back/Top Traq Dampers

						Front/Back/Top Traq[1]					
Unit Size	W	L	H	TH	TW	RH	RW	AD	AE	AF	AG
3	31.50	34.00	29.00	16.13	16.13	16.13	16.13	7.50	9.75	8.00	9.75
4 top std/back low-flow	44.00	41.00	29.00	17.13	32.88	17.63	33.63	6.00	8.00	10.50	5.63
4 top std/back std	44.00	34.00	29.00	17.13	32.88	16.13	33.50	4.50	7.13	10.50	5.63
4 top low-flow/back std	44.00	34.00	29.00	18.88	32.63	16.13	33.50	4.50	7.13	7.00	5.88
6 top std/back low-flow	44.00	34.00	35.25	17.13	32.88	18.13	32.88	8.50	8.50	10.50	5.63
6 top low-flow/back std	44.00	34.00	35.25	19.38	31.88	16.13	33.88	5.00	6.25	6.50	5.88
6 top std/back std	44.00	34.00	35.25	17.13	32.88	16.13	33.88	5.00	6.25	10.50	5.63
8	50.50	44.00	37.75	27.38	39.38	28.63	37.13	4.88	6.50	10.50	5.63
10	61.50	36.00	37.75	16.13	52.13	16.13	54.13	9.00	4.50	12.50	4.88
12	66.50	42.50	41.50	27.88	58.75	20.63	59.88	7.88	3.75	7.63	3.63
14	72.00	36.00	41.50	21.75	61.38	19.75	62.75	5.25	7.13	6.13	5.38
17	72.00	36.00	49.00	21.75	61.38	19.75	62.75	12.75	5.13	6.25	5.38
21	80.00	50.25	52.75	37.75	70.50	24.75	76.25	11.00	2.00	4.88	4.88
25 top low-flow and back std	80.00	46.00	61.50	35.25	70.75	24.75	76.25	19.75	2.00	4.63	4.63
25 top std	80.00	56.50	61.50	37.75	70.50	24.75	76.25	19.75	2.00	5.88	4.88
30	93.50	56.50	61.50	42.75	84.75	36.75	88.75	12.75	2.75	8.25	4.13

Note: **1** Use table when Traq damper will be used in two faces of the mixing section (i.e. front and top or back and top).

Table 141. Mixing Box with Top-Bottom Airfoil/Front-Back Traq Dampers

						Top-Bottom Airfoil/Front-Back Traq Dampers[1]									
Unit Size	W	L	H	TH	TW	BH	BW	RH	RW	AD	AE	AF	AG	AH	AJ
3	31.50	34.00	29.00	17	16.25	12.00	11.50	16.13	16.13	7.50	9.75	2.50	7.63	11.38	10.00
4 top airfoil/std	44.00	34.00	29.00	17	22.25			16.13	33.50	4.50	7.13	7.50	10.88		
4 bottom airfoil/std	44.00	34.00	29.00			12.00	17.50	16.13	34.63	10.50	5.50			11.38	13.25
4 top airfoil/low-flow	44.00	34.00	29.00	17	22.25			17.63	33.63	6.00	8.00	7.50	10.88		
4 bottom airfoil/low-flow	44.00	34.00	29.00			12.00	17.50	17.63	33.63	6.00	8.00			11.38	13.25
6 top airfoil/std	44.00	34.00	35.25	17	28.25			16.13	33.88	5.00	6.25	2.50	7.88		
6 top airfoil/low-flow	44.00	34.00	35.25	17	28.25			16.13	35.13	8.50	6.00	2.50	7.88		
6 bottom airfoil	44.00	34.00	35.25			12.00	23.50	16.13	35.13	12.50	6.00			4.38	10.25
8 top airfoil	50.50	36.00	37.75	17	37.25			28.63	37.13	4.88	6.50	2.50	6.63		
8 bottom airfoil	50.50	36.00	37.75			12.00	32.50	27.13	39.63	8.50	7.00			4.38	9.00
10 top airfoil	61.50	36.00	37.75	17	45.75			16.13	54.13	9.00	4.50	2.50	7.88		
10 bottom airfoil	61.50	36.00	37.75			12.00	41.00	16.13	54.13	18.50	4.50			5.38	10.25
12 top airfoil	66.50	36.00	41.50	17	55.50			23.75	58.63	4.75	5.00	2.50	5.50		
12 bottom airfoil	66.50	36.00	41.50			12.00	50.75	22.25	59.13	17.25	4.50			4.38	7.88
14 top airfoil	72.00	36.00	41.50	22.75	44.25			19.75	62.75	5.25	7.13	2.50	13.88		
14 bottom airfoil	72.00	36.00	41.50			17.75	39.50	19.75	62.75	17.75	7.13			4.38	16.25
17 top airfoil	72.00	36.00	49.00	22.75	54.00			19.75	62.75	12.75	5.13	2.50	9.00		
17 bottom airfoil	72.00	36.00	49.00			17.75	49.25	19.75	62.75	17.75	5.13			4.38	11.38
21 top airfoil	80.00	34.00	52.75	22.75	66.00			24.75	76.25	11.00	2.00	2.50	7.00		
21 bottom airfoil	80.00	34.00	52.75			17.75	61.25	24.75	76.25	17.13	2.00			4.38	9.38
25	80.00	46.00	61.50	28.50	61.50	23.50	56.75	24.75	76.25	19.75	2.00	2.50	9.25	4.38	11.63
30 top airfoil	93.50	46.00	61.50	28.50	71.00			36.75	88.75	12.75	2.75	2.50	11.25		
30 bottom airfoil	93.50	46.00	61.50			23.50	66.25	39.75	88.75	14.75	2.75			4.38	13.63

Note: 1Use table when Traq damper is located only on the front or back face with a top or bottom airfoil damper (i.e. Traq is front face and top airfoil damper).

Table 142. Mixing Box with Top Traq/Front-Back-Bottom Airfoil Dampers

				Top Traq/Front-Back-Bottom Airfoil Dampers[1]											
Unit Size	W	L	H	TH	TW	BH	BW	RH	RW	AD	AE	AF	AG	AH	AJ
3	31.50	34.00	29.00	16.13	16.13	12	11.50	17	16.25	8.25	7.63	8.00	9.75	4.38	10.00
4 low-flow	44.00	34.00	29.00	19.38	31.88	12	17.50	17	22.25	8.25	10.88	6.50	5.88	4.38	13.25
4 std	44.00	34.00	29.00	17.13	32.88	12	17.50	17	22.25	8.25	10.88	10.50	5.63	4.38	13.25
6 low-flow	44.00	34.00	35.25	19.38	31.88	12	23.50	17	28.25	10.50	7.88	6.50	5.88	4.38	10.25
6 std	44.00	34.00	35.25	17.13	32.88	12	23.50	17	28.25	10.50	7.88	10.50	5.63	4.38	10.25
8	50.50	44.00[1]	37.75	27.38	39.38	12	32.50	17	37.25	11.75	6.63	10.50	5.63	4.38	9.00
10	61.50	36.00	37.75	16.13	52.13	12	41.00	17	45.75	11.75	7.88	12.50	4.88	5.38	10.25
12	66.50	42.50[1]	41.50	27.88	58.75	12	50.75	17	55.50	13.63	5.50	7.63	3.63	4.38	7.88
14	72.00	36.00	41.50	21.75	61.38	17.75	39.50	22.75	44.25	10.75	13.88	6.13	5.38	4.38	16.25
17	72.00	36.00	49.00	21.75	61.38	17.75	49.25	22.75	54.00	14.50	9.00	6.13	5.38	4.38	11.38
21	80.00	50.25[1]	52.75	37.75	70.50	17.75	61.25	22.75	66.00	16.38	7.00	4.88	4.88	4.38	9.38
25 low-flow	80.00	46.00	61.50	35.25	70.75	23.50	56.75	28.50	61.50	17.88	9.25	4.63	4.63	4.38	11.63
25 std	80.00	56.50[1]	61.50	37.75	70.50	23.50	56.75	28.50	61.50	17.88	9.25	5.88	4.88	4.38	11.63
30	93.50	56.50[1]	61.50	42.75	84.75	23.50	66.25	28.50	71.00	17.88	11.25	8.25	4.13	4.38	13.63

Note: 1Use table when Traq damper is located only on the top face with a back or bottom airfoil damper (i.e. Traq is top face and back airfoil damper).

Table 143.Mixing box with top only or back only Traq dampers

				Top/Back Traq Dampers only							
Unit Size	W	L	H	TH	TW	RH	RW	AF	AG	AD	AE
4 top std only	31.50	34.00	29.00	17.13	32.88			10.50	5.63		
4 top low-flow only	31.50	34.00	29.00	18.88	32.63			7.00	5.88		
4 back std only	31.50	34.00	29.00			16.13	33.50			4.50	7.13
4 back low-flow only	31.50	34.00	29.00			17.63	33.63			6.00	8.00
6 top std only	44.00	34.00	35.25	17.13	32.88			10.50	5.63		
6 top low-flow only	44.00	34.00	35.25	19.38	31.88			6.50	5.88		
6 back std only	44.00	34.00	35.25			16.13	33.88			5.00	6.25
6 back low-flow only	44.00	34.00	35.25			16.13	35.13			8.50	6.00
8 top std only	50.50	44.00	37.75	27.38	39.38			10.50	5.63		
8 top low-flow only	50.50	44.00	37.75	27.38	39.38			10.50	5.63		
8 back std only	50.50	36.00	37.75			28.63	37.13			4.88	6.50
8 back low-flow only	50.50	36.00	37.75			28.63	37.13			4.88	6.50
10 top std only	61.50	36.00	37.75	16.13	52.13			12.50	4.88		
10 top low-flow only	61.50	36.00	37.75	16.13	52.13			12.50	4.88		
10 back std only	61.50	36.00	37.75			16.13	54.13			9.00	4.50
10 back low-flow only	61.50	36.00	37.75			16.13	54.13			9.00	4.50
12 top std only	66.50	42.50	41.50	27.88	58.75			7.63	3.63		
12 top low-flow only	66.50	42.50	41.50	27.88	58.75			7.63	3.63		
12 back std only	66.50	36.00	41.50			22.25	59.13			17.25	4.50
12 back low-flow only	66.50	36.00	41.50			22.25	59.13			17.25	4.50
14 top std only	72.00	36.00	41.50	21.75	61.38			6.13	5.38		
14 top low-flow only	72.00	36.00	41.50	21.75	61.38			6.13	5.38		
14 back std only	72.00	36.00	41.50			19.75	62.75			17.75	7.13
14 back low-flow only	72.00	36.00	41.50			19.75	62.75			17.75	7.13
17 top std only	72.00	36.00	49.00	21.75	61.38			6.25	5.38		
17 top low-flow only	72.00	36.00	49.00	21.75	61.38			6.25	5.38		
17 back std only	72.00	36.00	49.00			19.75	62.75			17.75	5.13
17 back low-flow only	72.00	36.00	49.00			19.75	62.75			17.75	5.13
21 top std only	80.00	50.25	52.75	37.75	70.50			4.88	4.88		
21 top low-flow only	80.00	50.25	52.75	37.75	70.50			4.88	4.88		
21 back std only	80.00	34.00	52.75			24.75	76.25			17.13	2.00
21 back low-flow only	80.00	34.00	52.75			24.75	76.25			17.13	2.00
25 top std only	80.00	56.50	61.50	37.75	70.50			5.88	4.88		
25 top low-flow only	80.00	46.00	61.50	35.25	70.75			4.63	4.63		
25 back std only	80.00	46.00	61.50			24.75	76.25			19.75	2.00
25 back low-flow only	80.00	46.00	61.50			24.75	76.25			19.75	2.00
30 top std only	93.50	56.50	61.50	42.75	84.75			8.25	4.13		
30 top low-flow only	93.50	56.50	61.50	42.75	84.75			8.25	4.13		
30 back std only	93.50	46.00	61.50			39.75	88.75			14.75	2.75
30 back low-flow only	93.50	46.00	61.50			39.75	88.75			14.75	2.75

Mechanical Specifications

Performance Climate Changer™ air handlers must be rigged, lifted, and installed in strict accordance with the Installation, Operation, and Maintenance manual (CLCH-SVX07A-EN) for Performance air handlers. The units are also to be installed in strict accordance with the specifications.

Units may be shipped fully assembled or disassembled to the minimum functional section size in accordance with shipping and jobsite requirements. Units shall be shipped on an integral base frame (variable height from the standard 2.5 inches to 8 inches) for the purpose of mounting units to a housekeeping pad and provide additional height to properly trap condensate from the unit. The integral base frame may be used for ceiling suspension, external isolation, or as a housekeeping pad.

Units will be shipped with a shipping skid designed for forklift transport and the integral base will be designed with the necessary number of lift points for safe installation. The lift points will be designed to accept standard rigging devices and removable after installation. Units shipped in sections will have a minimum of four points of lift.

Per ASHRAE 62.1 recommendation, units will be shipped stretch-wrapped to protect unit from in-transit rain and debris. Installing contractor is responsible for long-term storage in accordance with the Installation, Operation, and Maintenance manual (CLCH-SVX07A-EN).

Unit shall be UL and C-UL Listed.

Air-handling performance data shall be certified in accordance with AHRI Standard 430. Unit sound performance data shall be provided using AHRI Standard 260 test methods and reported as sound power. Coil performance shall be certified in accordance with AHRI Standard 410.

Unit Construction

Casing Construction

All unit panels shall be 2-inch solid, double-wall construction to facilitate cleaning of unit interior. Unit panels shall be provided with a mid-span, no through metal, internal thermal break. Casing thermal performance shall be such that under 55°F supply air temperature and design conditions on the exterior of the unit of 81°F dry bulb and 73°F wet bulb, condensation shall not form on the casing exterior.

All exterior and interior AHU panels will be made of galvanized steel. Optionally, all interior AHU casing panels will be made of stainless steel.

The casing shall be able to withstand up to 8 inches w.g. positive or negative static pressure. The casing shall be able to withstand up to 1.5 times design static pressure, or 8 inches w.g., whichever is less with no more than 0.0042 inch deflection per inch of panel span.

Unit Flooring

The unit floor shall be of sufficient strength to support a 250-lb. load during maintenance activities and shall deflect no more than 0.0042 inch per inch of panel span.

Casing Leakage

The casing air leakage shall not exceed leak class 9 ($C_L = 9$) per ASHRAE 111 at 1.25 times maximum casing static pressure (P in inches w.g.), up to 8 inches w.g., where maximum casing leakage (cfm/100 ft^2 of casing surface area) = $C_L \times P^{0.65}$.

Optionally, the casing air leakage shall not exceed leak class 6 ($C_L = 6$) per ASHRAE 111 at 1.25 times maximum casing static pressure (P in inches w.g.), up to 8 inches w.g., where maximum casing leakage (cfm/100 ft^2 of casing surface area) = $C_L \times P^{0.65}$.

Insulation

Panel insulation shall provide a minimum thermal resistance (R) value of 13 ft^2•h•ºF/Btu throughout the entire unit. Insulation shall completely fill the panel cavities in all directions so that no voids exist and settling of insulation is prevented. Panel insulation shall comply with NFPA 90A.

Drain Pans

All cooling coil sections shall be provided with an insulated, double-wall, galvanized or stainless steel drain pan. To address indoor air quality (IAQ), the drain pan shall be designed in accordance with ASHRAE 62.1 being of sufficient size to collect all condensation produced from the coil and sloped in two planes promoting positive drainage to eliminate stagnant water conditions. The outlet shall be located at the lowest point of the pan and shall be sufficient diameter to preclude drain pan overflow under any normally expected operating condition. All drain pan threaded connections shall be visible external to the unit. Drain connections shall be of the same material as the primary drain pan and shall extend a minimum of 2 1/2 inches beyond the base to ensure adequate room for field piping of condensate drain traps. Coil support members inside the drain pan shall be of the same material as the drain pan and coil casing. Heating coil, access, and mixing sections may be provided with an optional IAQ drain pan.

Access Doors

Access doors shall be 2-inch double-wall construction. Interior and exterior door panels shall be of the same construction as the interior and exterior wall panels, respectively. All doors downstream of cooling coils shall be provided with a thermal break construction of door panel and door frame. Gasketing shall be provided around the full perimeter of the doors to prevent air leakage.

Surface-mounted handles shall be provided to allow quick access to the interior of the functional section and to prevent through-cabinet penetrations that could likely weaken the casing leakage and thermal performance. Handle hardware shall be designed to prevent unintended closure. Access doors shall be hinged and removable for quick, easy access. Hinges shall be interchangeable with the door handle hardware to allow for alternating door swing in the field to minimize access interference due to unforeseen job site obstructions. Door handle hardware shall be adjustable and visually indicate locking position of door latch external to the section.

All doors shall be a minimum of 60 inches high when sufficient height is available, or the maximum height allowed by the unit height.

Door handles will be provided for each latching point of the door necessary to maintain the specified air leakage integrity of the unit. Optionally, a single-handle door shall be provided for all outward swinging doors linked to multiple latching points necessary to maintain the specified air leakage integrity of the unit.

View Windows

An optional shatterproof window for viewing, capable of withstanding unit operating pressures, shall be provided in the door.

Marine Lights

A factory-mounted, weather-resistant (enclosed and gasketed to prevent water and dust intrusion), light emitting diode (LED) fixture shall be provided in sections of the unit as specified for maintenance and service visibility. Fixture shall be complete with aluminum die cast housing, polycarbonate lens designed for maximum light output, and LEDs wired to a single switch within a factory-provided service module. LED lighting shall provide instant-on white light and have a minimum 50,000 hour life. Fixtures shall be designed for flexible positioning during maintenance and service activities for optimal location.

All lights within the unit shall be wired to a single switch within the factory provided service module. The service module shall include a GFCI receptacle separate from the load side of the equipment. Electrical contractor shall be required to provide a 120V supply to the factory-mounted service module for the marine light circuit (unless single-point power is provided) and always for the GFCI receptacle circuit per NEC.

The service module shall be provided on the fan section, unless a controls section is provided. In which case, the service module will be provided on the controls section.

Fans

The fan type shall be provided as required for stable operation and optimum energy efficiency. The fan shall be statically and dynamically balanced at the factory as a complete fan assembly (fan wheel, motor, drive, and belts). The fan shaft shall not exceed 75 percent of its first critical speed at any cataloged speed. Fan wheels shall be keyed to the fan shaft to prevent slipping. The fan shafts shall be solid steel. The fan section shall be provided with an access door on the drive side of the fan.

FC Fan

The fan shall be a double-width, double-inlet, multiblade-type, forward-curved (FC) fan. The fan shall be equipped with self-aligning, antifriction bearings with an L-50 life of 200,000 hours as calculated per ANSI/AFBMA Standard 9. Fan performance shall be certified as complying with AHRI Standard 430.

BC Fan

The fan shall be a double-width, double-inlet, multiblade-type backward-curved (BC) fan. The fan shall be equipped with self-aligning, antifriction bearings with an L-50 life of 200,000 hours as calculated per ANSI/AFBMA Standard 9. Fan performance shall be certified as complying with AHRI Standard 430.

AF Fan

The fan shall be a double-width, double-inlet, multiblade-type, airfoil (AF) fan. The fan shall be equipped with self-aligning, antifriction bearings with an L-50 life of 200,000 hours, as calculated per ANSI/AFBMA Standard 9. Fan performance shall be certified as complying with AHRI Standard 430.

Plenum (Belt-drive) Fan

The fan shall be a single-width, single-inlet, multiblade-type, plenum fan. The fan blades shall be backward-inclined airfoil. Plenum fans shall be equipped with self-aligning, antifriction, pillow-block bearings with an L-50 life of 200,000 hours as calculated per ANSI/AFBMA Standard 9.

Fan Isolation

The fan shall be isolated from the unit casing by a flexible connection.

1-Inch, Seismic Spring Isolators

The fan and motor assembly (on sizes 3 to 8) shall be internally isolated from the unit casing with 1-inch (25.3-mm) deflection spring isolators, furnished and installed by the unit manufacturer. The isolation system shall be designed to resist loads produced by external forces, such as earthquakes, and conform to the current IBC seismic requirements.

2-Inch, Seismic Spring Isolators

The fan and motor assembly (on sizes 10 to 30) shall be internally isolated from the unit casing with 2-inch (50.8-mm) deflection spring isolators, furnished and installed by the unit manufacturer. The

isolation system shall be designed to resist loads produced by external forces, such as earthquakes, and conform to the current IBC seismic requirements.

Fan Drives

- *Variable Pitch.* The drives shall be variable pitch, suitable for adjustment within five percent of the specified speed.
- *Fixed Pitch.* The drives shall be constant speed with fixed-pitch sheaves.
- *1.2 Service Factor.* The drives shall be selected at a minimum 20 percent larger than the motor horsepower.
- *1.5 Service Factor.* The drives shall be selected at a minimum 50 percent larger than the motor horsepower.

Fan Motors

The motor shall be integrally mounted to an isolated fan assembly furnished by the unit manufacturer. The motor shall be mounted inside the unit casing on an adjustable base to permit adjustment of drive-belt tension. The motor shall meet or exceed all NEMA Standards Publication MG1 requirements and comply with NEMA premium efficiency levels when applicable. The motor shall have T-frame, squirrel cage with size, type, and electrical characteristics as shown on the equipment schedule.

- *Open Drip-Proof.* The motor shall be open and drip-proof.
- *Totally Enclosed Fan-Cooled (TEFC).* The motor shall be totally enclosed and fan-cooled.

Motor Options

- 200 volt, 3-phase, 60 Hz
- 230 volt, 3-phase, 60 Hz
- 460 volt, 3-phase, 60 Hz
- 575 volt, 3-phase, 60 Hz
- 115 volt, single-phase, 60 Hz
- 230 volt, single-phase, 60 Hz

Grease Lines

Bearings are selectable with life-time lubrication or with relubrication required. For any bearing requiring relubrication, the grease line shall be extended to the fan-support bracket on the drive side of the fan.

Fan Section Options

Multiple Belt Drive

The fan section with a belt-driven fan shall be provided with a multiple belt drive.

External Motor Junction Box

The fan section shall have motor leads extended to a factory-installed NEMA 4 external junction box to facilitate motor wiring and to maintain air leakage integrity of the casing.

Motor wiring conduit

The fan motor wiring shall be factory-wired to the unit-mounted starter/disconnect, variable frequency drive (VFD), or external motor junction box within flexible metal conduit of adequate length so that the fan vibration isolation will not be restricted.

Flow Meter

The fan shall have an air measurement system to measure fan airflow directly or measure differential pressure that can be used to calculate fan airflow. The system shall predict airflow within +/-5 percent accuracy when operating from 45 percent to 95 percent wide-open volume. The submitted fan air performance and noise levels shall not be affected by the installation of the device. Any device that provides an obstruction to the fan inlet will not be accepted.

Belt Guard

Fan sections with centrifugal housed fans shall be provided with a corrosion-proof, wire mesh belt guard to deter incidental contact with rotating sheaves and belts.

Door Guard

Fans sections with plenum fans shall be provided with an expanded-metal guard screen for the access door, mounted on the door opening, to deter unauthorized entry and incidental contact with rotating components.

Fan Modulation

Variable-Frequency Drives (VFDs)

For variable-air-volume applications, airflow shall be modulated by a VFD that controls fan speed.

Inverter Test

Inverter test shall be performed to check vibration at unloaded conditions. Fan vibration levels shall be checked from 100 percent to 30 percent of required operating rpm.

Coils

Coils shall be manufactured by the supplier of the air handling unit and installed such that headers and return bends are enclosed by unit casing. Coils shall be removable by unbolting the wall panels in the coil section. Coil connections shall be clearly labeled on unit exterior. Fin surfaces shall be cleaned prior to installation in the unit to remove any oil or dirt that may have accumulated on the fin surfaces during manufacturing of the coil.

Horizontal and Vertical Coil Sections

The coil section shall be provided complete with coil and coil holding frame. Coil section side panels shall be easily removable to allow for removal and replacement of coils without impacting the structural integrity of the unit. The coils shall be installed such that headers and return bends are enclosed by unit casings. If two or more cooling coils are stacked in the unit, an intermediate drain pan shall be installed between each coil. Like the primary drain pan, the intermediate drain pan shall be designed being of sufficient size to collect all condensation produced from the coil and sloped to promote positive drainage to eliminate stagnant water conditions. The intermediate pan shall begin at the leading face of the water-producing device and be of sufficient length extending downstream to prevent condensate from passing through the air stream of the lower coil. Intermediate drain pan shall include downspouts to direct condensate to the primary drain pan. The outlet shall be located at the lowest point of the pan and shall be sufficient diameter to preclude drain pan overflow under any normally expected operating condition.

Inspection Section

The coil section shall include an inspection section complete with a double-wall, removable door downstream of the coil for inspection, cleaning, and maintenance. Interior and exterior door panels shall be of the same construction as the interior and exterior wall panels, respectively. All doors downstream of cooling coils shall be provided with a thermal break construction of door panel and door frame.

Water Coils (UW, UU, W, 5W, 5A, WD, 5D, D1, D2, P, or TT)

The coils shall have aluminum fins and seamless copper tubes. Copper fins may be applied to coils with 5/8-inch tubes. Fins shall have collars drawn, belled, and firmly bonded to tubes by mechanical expansion of the tubes. The coil casing may be galvanized or stainless steel. The coils shall be proof-tested to 300 psig and leak-tested under water to 200 psig. Coil performance data and coils containing water or ethylene glycol shall be certified in accordance with AHRI Standard 410. Propylene glycol and calcium chloride, or mixtures thereof, are outside the scope of AHRI Standard 410 and, therefore, do not require AHRI 410 rating or certification.

Headers are to be constructed of round copper pipe or cast iron.

- Tubes shall be 1/2-inch OD, 0.016-inch copper.
- Tubes shall be 1/2-inch OD, 0.025-inch copper.
- Tubes shall be 5/8-inch OD, 0.020-inch copper.
- Tubes shall be 5/8-inch OD, 0.024-inch copper.
- Tubes shall be 5/8-inch OD, 0.035-inch copper.

Hydronic coils may be supplied with factory installed drain and vent piping to unit casing exterior.

Refrigerant Cooling Coils (UF)

The coils shall have aluminum fins and seamless copper tubes. The fins shall have collars drawn, belled, and firmly bonded to tubes by mechanical expansion of the tubes. The coil casing may be galvanized or stainless steel. Suction and liquid line connections shall extend to the unit exterior.

The coils shall be proof-tested to 450 psig and leak-tested to 300 psig air pressure under water. After testing, the inside of the coils shall be dried, all connections shall be sealed, and the coil shall be shipped with a charge of dry nitrogen.

Suction headers shall be constructed of copper tubing with connections penetrating unit casings to permit sweat connections to refrigerant lines. The coils shall have equalizing vertical distributors sized according to the capacities of the coils. Coil performance data shall be certified in accordance with AHRI Standard 410.

- Tubes shall be 1/2-inch OD, 0.016-inch copper.
- Tubes shall be 1/2-inch OD, 0.025-inch copper.

Steam Heating Coil (NS)

The coils shall have aluminum fins and seamless copper tubes. Copper fins may be applied to coils with 1-inch tubes. The fins shall have collars drawn, belled, and firmly bonded to tubes by mechanical expansion of the tubes. The coil casing may be galvanized or stainless steel. Non-freeze, steam-distributing-type coils shall be provided. Steam coils shall be pitched in the unit for proper drainage of steam condensate from coils. The coils shall be proof-tested to 300 psig and leak-tested to 200 psig air pressure under water. Headers are to be constructed of cast iron. Inner tubes shall have orifices that ensure even steam distribution throughout the full length of the outer tube. Orifices shall be directed toward the return connections to ensure that the steam condensate is adequately removed from the coil. Coil performance data shall be certified in accordance with AHRI Standard 410.

- Tube construction shall be a 11/16-inch OD, 0.031-inch copper inner tube with a 1-inch OD, 0.031 copper outer tube.
- Tube construction shall be a 11/16-inch OD, 0.031-inch copper inner tube with a 1-inch OD, 0.049-inch red brass outer tube.

Coil Coating

The coil shall have a flexible epoxy polymer e-coat uniformly applied to all coil surface areas without material bridging between fins. Coating process shall ensure complete coil encapsulation and a uniform dry film thickness from 0.8 - 1.2 mil on all surface areas including fin edges. Superior hardness characteristics of 2H per ASTM D3363-92A and a cross-hatch adhesion of 4B-5B per ASTM B3359-93. Impact resistance shall be up to 160 in/lb. per ASTM D2794-93. Humidity and water immersion resistance shall be up to a minimum 1000 and 260 hours respectively (ASTM D2247-92 and ASTM D870-02). Corrosion durability shall be confirmed through testing to no less than 5,000 hours salt spray per ASTM B117-90 using scribed aluminum test coupons.

Filters

Filter sections shall have filter racks, at least one access door for filter removal, and filter block-offs to prevent air bypass around filters. The filter sections shall be supplied with 2-inch or 4-inch flat, or 2-inch or 4-inch angled, bag, or cartridge filters.

Permanent Filters

The filters shall be 2-inch, all-metal, viscous-imprisonment type, capable of operating up to 625-fpm face velocity without loss of filter efficiency and holding capacity. The filter media shall be layers of cleanable wire mesh. The filter frame shall be constructed of galvanized steel. The filters shall have a MERV 2 rating when tested in accordance with the ANSI/ASHRAE Standard 52.2.

Throwaway Filters

The filters shall be throwaway-type and shall have 2-inch fiberglass media contained in a rigid frame. Filters shall be capable of operating up to 500-fpm face velocity without loss of filter efficiency and holding capacity. Filters shall have a rigid supporting mesh across the leaving face of the media. The filters shall have a MERV 5 rating when tested in accordance with the ANSI/ASHRAE Standard 52.2.

Pleated Media Filters

The filters shall be 2-inch or 4 inch, made with 100 percent synthetic fibers that are continuously laminated to a supported steel-wire grid with water repellent adhesive. Filters shall be capable of operating up to 625-fpm face velocity without loss of filter efficiency and holding capacity. The filters shall have a MERV 8 rating when tested in accordance with the ANSI/ASHRAE Standard 52.2.

Bag Filters

The filters shall be fine-fiber, all-glass media with spun backing to keep glass fibers from eroding downstream. The stitching method shall permit the bag to retain its pleated shape without the use of a wire-basket support. The filters shall be capable of operating up to 625-fpm face velocity without loss of filter efficiency and holding capacity.

The filters shall be sealed into a metal header. A gasket material shall be installed on the metal header of the filter to prevent filter bypass where the metal headers meet the side-access racks. All bag filters shall be furnished with a 2-inch pleated media MERV 8 prefilter to extend bag filter life.

The manufacturer shall supply a side-access filter rack capable of holding bag filters and prefilters.

The filters shall have a MERV 12 to 14 rating when tested in accordance with the ANSI/ASHRAE Standard 52.2.

Cartridge Filters

The filters shall be constructed with a continuous sheet of fine-fiber media made into closely spaced pleats. The filters shall be capable of operating up to 625-fpm face velocity for 12-inch deep filters without loss of filter efficiency and holding capacity.

The filters shall be sealed into a metal frame assembled in a rigid manner. A gasket material shall be installed on the metal header of the filter to prevent filter bypass where the metal headers meet on the side-access racks.

All cartridge filters shall be furnished with a 2-inch pleated media MERV 8 prefilter to provide extended cartridge life. The manufacturer shall supply a side-access filter rack capable of holding cartridge filters and prefilters. Cartridge filters shall have a MERV 11 to 15 rating when tested in accordance with the ANSI/ASHRAE Standard 52.2.

4-Inch High-Efficiency Filters

The filters shall be constructed with a fine fiber media made into closely spaced pleats. The filters shall be capable of operating up to 625-fpm face velocity without loss of filter efficiency and holding capacity. The filter media shall be sealed into a frame assembled in a rigid manner. All 4-inch high-efficiency filters shall be furnished with a 2-inch prefilter to provide extended filter life. The manufacturer shall supply a side-access filter rack capable of holding 4-inch high-efficiency filters and prefilters. The filters shall have a MERV 11 to 14 rating when tested in accordance with the ANSI/ASHRAE Standard 52.2.

Filter Section Option

Differential Pressure Gage

A factory-installed dial type differential pressure gage shall be piped to both sides of the filter to indicate status. Gage shall maintain a +/- 5 percent accuracy within operating temperature limits of -20°F to 120°F. Gage shall be flush mounted with casing outer wall. Filter sections consisting of pre- and post-filters shall have a gage for each.

Mixing Section

Mixing Section, Filter Mixing Section, Airflow Measurement Station (Traq™ Dampers), and Economizer Sections

A functional section shall be provided to support the damper assembly for outdoor, return, and/or exhaust air.

Dampers

Dampers shall modulate the volume of outdoor, return, or exhaust air. The dampers shall be of double-skin airfoil design with metal, compressible jamb seals and extruded-vinyl blade-edge seals on all blades. The blades shall rotate on stainless-steel sleeve bearings. The dampers shall be rated for a maximum leakage rate of 4 cfm/ft² at 1 in. w.g. complying with ASHRAE 90.1 maximum damper leakage. All leakage testing and pressure ratings shall be based on AMCA Standard 500-D. Dampers may be arranged in a parallel or opposed-blade configuration.

Airflow Measurement Station (Traq Dampers)

A factory-mounted airflow measurement station tested in accordance with AMCA Standard 611 and bearing the AMCA Ratings Seal for Airflow Measurement Performance shall be provided in the outdoor and/or return air opening to measure airflow. The damper blades shall be galvanized steel, housed in a galvanized steel frame and mechanically fastened to a rotating axle rod. The dampers shall be rated for a maximum leakage rate of 4 cfm/ft² at 1 in. w.g. complying with ASHRAE 90.1 maximum damper leakage. The standard Traq airflow measurement station shall be capable of

measuring from 15 percent to 100 percent of unit nominal airflow. Optionally, a low-flow Traq airflow measurement station shall be capable of measuring from 7.5 percent to 100 percent (sizes 6-30) of unit nominal airflow. The airflow measurement station shall adjust for temperature variations and provide a 2 to 10 Vdc signal that corresponds to actual airflow for controlling and documenting airflow. The accuracy of the airflow measurement station shall be ±5 percent.

Other Sections and Options

Access/Inspection Sections

A section shall be provided to allow additional access/inspection of unit components and space for field-installed components as needed. An access door shall be provided for easy access. All access sections shall be complete with a double-wall, removable door downstream for inspection, cleaning, and maintenance. Interior and exterior door panels shall be of the same construction as the interior and exterior wall panels, respectively. All doors downstream of cooling coils shall be provided with a thermal break construction of door panel and door frame.

Diffuser Section

A diffuser section shall be provided immediately downstream of the fan section. The diffuser shall provide equal air distribution to blow-thru components immediately downstream of the diffuser.

Turning and Discharge Plenum Sections

Plenums shall be provided to efficiently turn air and provide sound attenuation. Discharge plenum opening types and sizes shall be scaled to meet engineering requirements. The vertical discharge plenum height may be scaled to accommodate the appropriate discharge duct height.

Plenum Attenuation Panels

Discharge plenum panels shall include an acoustical liner. The liner shall be fabricated from stainless steel perforated material to prevent corrosion and designed to completely encapsulate fiberglass insulation. The perforation spacing and hole size shall be such as to prevent insulation breakaway, flake off, or delamination when tested at 9,000 fpm, in accordance with UL Specification 181.

Single-Point Power Wiring

For air-handling units requiring both a supply and return/exhaust fan, the manufacturer shall supply single-point power wiring to both factory-installed and tested fan motor starters or VFD. Single-point power wiring shall include a high voltage distribution block and main external unit disconnect with lockout/tagout capabilities.

Air-handling units with controls and lights may also be wired to the single point power wiring circuit when starters or VFDs are supplied on any one-fan or two-fan unit. Single-point power wiring shall not compromise the UL certification of the unit.

Controls

Combination Starter–Disconnects

An IEC combination starter/disconnect shall be provided for each fan motor. Each starter / disconnect shall be properly sized, factory mounted in a full metal enclosure, and wired to the fan motor to facilitate temporary heating, cooling, ventilation, and/or timely completion of the project. Starter / disconnects shall include a circuit breaker disconnect with a through-the-door interlocking handle (external sizes 3-21) or a beside-the-door interlocking handle (internal sizes 3-30) spring loaded and designed to rest only in the full ON or OFF state and shall be lockable in these states.

A concealed defeater mechanism shall allow entry into the enclosure when the handle is in the ON position. The starter package shall also include:

- Hand-Off-Auto (H-O-A) selector switch
- Two N.O. auxiliary contacts
- Overload heaters
- Manual reset overloads
- 120V control transformer with fusing and secondary grounding

Units with factory-mounted controls shall also include power wiring from the starter control transformer to the secondary control system transformers, and start-stop wiring from the direct digital controller start-stop relay to the starter H-O-A switch.

Combination VFD and Disconnects

A combination VFD/disconnect shall be provided for each fan motor. Each VFD/disconnect shall be properly sized, factory mounted in a full metal enclosure, wired to the fan motor, and commissioned to facilitate temporary heating, cooling, ventilation, and/or timely completion of the project. VFD/disconnects shall include a circuit breaker disconnect with a through-the-door interlocking handle (external sizes 3-21) or a beside-the-door interlocking handle (internal sizes 3-30) spring loaded and designed to rest only in the full ON or OFF state and shall be lockable in these states. A concealed defeater mechanism shall allow entry into the enclosure when the handle is in the ON position. The VFD package shall also include:

- Electronic manual speed control
- Hand-Off-Auto (H-O-A) selector switch
- Inlet fuses to provide maximum protection against inlet short circuit
- Current limited stall prevention
- Auto restart after momentary power loss
- Speed search for starting into rotating motor
- Anti-windmill with DC injection before start
- Phase-to-phase short circuit protection
- Ground fault protection

Units with factory-mounted controls shall include a control transformer with sufficient capacity to support both the VFD and controls requirements, binary output on/off wiring, analog output-speed-signal wiring, and all interfacing wiring between the VFD and the direct digital controller.

The VFD shall be UL508C listed and CSA certified and conform to applicable NEMA, ICS, NFPA, and IEC standards.

Optional Bypass

Bypass relays and bypass circuitry with a VFD/OFF/Bypass selector switch shall be provided.

Starter/Disconnect or VFD Enclosure Options

Starter or VFD shall be mounted externally in a NEMA Type 1 enclosure (unit sizes 3-21) or internal of unit casing (unit sizes 3-30). The internal enclosure shall be an integral part of the unit casing to allow for thermal venting to casing interior, but shall be accessible from unit exterior through access door. Internally mounted starters/VFDs shall have doors with the same construction as other doors on unit. An external disconnect shall be mounted beside the access door to the starter or VFD to disconnect full power from starter/VFD, lights, or control power.

Factory-Mounted DDC System

Factory-mounted direct-digital control (DDC) system shall be engineered, mounted, wired, and tested by the air handler manufacturer to reduce installed costs, improve reliability, and save time at unit startup. Each control system shall be fully functional in a stand-alone mode or may be tied to a building automation system with a single pair of twisted wires. All factory-mounted controls shall be covered by the air handler manufacturer's standard warranty.

Direct Digital Controller

Field-Programmable Controller

A dedicated, programmable, direct digital-controller with the appropriate point capabilities shall be unit-mounted on each air-handling unit. A portable screen and keypad shall be provided to facilitate local monitoring, troubleshooting, and changing of setpoints. The touch pad shall be able to quickly plug into other factory-configured controllers by the same manufacturer.

Factory-Mounted Control Options—Electronic End Devices

All factory-mounted control devices shall be provided to accommodate integration into existing building systems. Devices provided shall be wired to standard point locations of a unit-mounted direct digital controller or terminal block for a remote controller.

Mixing Section Damper Actuators

Spring return actuators shall be mounted with the outdoor air damper linked as normally closed and the return-air damper linked as normally open.

Airflow Measuring Stations (Traq Dampers)

Airflow monitoring stations shall provide a 2 to 10 Vdc signal, which corresponds to cfm, for controlling and documenting airflow.

Temperature Sensors

Unit-mounted temperature sensor material shall be selected for ease of integration into existing BAS control systems. Temperature sensor material types include:

- 1k ohm RTD, Platinum 385
- 1k ohm RTD, Nickel
- 10k ohm, Type II Thermistor
- 10k ohm, Type III Thermistor
- 20k ohm, Type IV Thermistor
- 100k ohm, Type II Thermistor

Fan Discharge Temperature Sensors

A button or probe temperature sensor shall be mounted in the fan discharge. The sensor material shall be selected for ease of BAS integration.

Averaging Temperature Sensors

An averaging temperature sensor shall be serpentined across the functional section. Bends of the capillaries shall be curved and fastened with capillary clips to prevent crimping and minimize wear. The sensor material shall be selected for ease of BAS integration.

Low-Limit Switches

A double-pole low limit switch shall be wired to a momentary push-button reset circuit. Capillaries are serpentined across the entering side of the coil. The bends of the capillaries shall be curved and fastened with capillary clips to prevent crimping and minimize wear. A separate low limit shall be provided for each coil in a coil stack.

Airflow Switches

A differential pressure switch piped to the discharge and suction sides of the fan shall indicate fan status.

Dirty Filter Switches

A differential pressure switch piped to both sides of the filter shall indicate filter status.

Condensate Overflow Switches

A float switch conforming to UL 508 shall be factory-installed in the drain pan that will detect a high condensate water level and be used to shut off the air handler in the event that the primary drain is blocked to comply with IMC 2006. The float switch shall be located at a point higher than the primary drain line connection and below the overflow rim of the drain pan.

Customer Interface Relays

Five-amp double-pole, double-throw relays shall be provided as required for each binary output of the controller for customer interface to:

- Motor starters of supply, return, and exhaust fans
- Relief dampers
- Pumps
- Condensing units

Field-Mounted Control Options

Control Valves

Control valves shall be provided by the air-handling unit (AHU) manufacturer and field-piped by the piping contractor. Power and signal wiring shall be extended to a factory-installed external junction box to facilitate field-wiring and to maintain air leakage integrity of the casing.

Space Temperature Sensors

Thermistor-type sensors shall be provided by the air-handling unit (AHU) manufacturer as required for field wiring.

Outdoor Air Sensors

Thermistor-type sensors shall be provided by the air-handling unit (AHU) manufacturer as required for field wiring.

www.trane.com

For more information, contact your local Trane office or e-mail us at comfort@trane.com

Literature Order Number	CLCH-PRC015-EN
Date	May 2009
Supersedes	New