KDK

SINCE 1909
JAPAN

KDK Company, Division of PES
4017, Takaki-cho, Kasugai, Aichi, Japan
http://kdk.jp

SINCE 1909
JAPAN

• Actual colors may vary slightly from those shown.
• Specifications are subject to change without prior notice.

CATALOG NO: K-AMCA003G1
PRINTED IN HONG KONG (August 2018)

Ventilating Fan

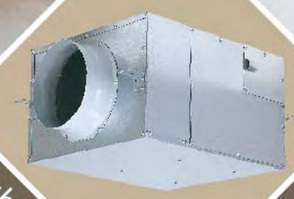

Cabinet Fan
(In-Line Fan)

Index

01 Ventilation and indoor Air Quality
03 Recommended Application
04 Features - Ceiling Mount Type Ventilating Fan
06 17CUG
07 24CUG / 24CDG / 24CHG
08 27CHH
09 32CDH
10 38CDG / 38CDG 05
11 24JRB
12 24JAB
13 24CMUA / 24CMHA
14 27CMHA
16 Features - Low Noise Type Cabinet Fan
18 12NSB / 15NSB
19 18NSB / 18NFB
20 20NSB / 23NLB
21 25NSB / 25NFB
22 25SWC / 25SMC
23 28NXC
24 Features - Industrial Type Ventilating Fan
25 25GSE / 30GSE / 35GSE
26 40GSE
27 45GSC/50GSC/60GSC
28 45GTC/50GTC/60GTC
29 30KQT/40KQT
30 50AEQ2
32 Features - Wall Mount Type VENTILATING FAN
33 15AAQ1
34 25AUFA
35 20AUH/25AUH/30AUH 11
36 20AUHT/25AUHT/30AUHT
37 20ALH/25ALH/30ALF 11
38 20ALHT/25ALHT/30ALFT
39 20RGF/25RGF/30RGF
40 20RGFT/25RGFT/30RGFT
41 20RLF/25RLF/30RLE
42 20RLFT/25RLFT/30RLET
43 20ASB/25ASB/30ASB/20ASB 05/25ASB 05/30ASB 05
44 Features - Window Mount Type VENTILATING FAN
45 15WJA
46 15WHCT/20WHCT
47 15WAA/20WAA/15WAAMN/20WAAMN
48 15WUD/20WUD
Specification Comparison Table -
49 Ceiling Mount Ventilating Fan
50 Low Noise Type Cabinet Fan
51 Industrial Type Ventilating Fan
52 Wall Mount Type Ventilating Fan
54 Window Mount Type Ventilating Fan

Ventilation and Indoor Air Quality

In order to retain energy efficiency by limiting heating or cooling losses, most buildings, especially homes, are tightly built with aluminum casing windows and rubber lining doors. This however comes at the cost of poor indoor air quality (IAQ), as the concentration of indoor pollutants, such as odors, dust, pet dander and bacteria, can reach up to five times higher than that found outside. Consequently, staying indoors will not give us clean, fresh air and be hazardous to the health of the occupants. These biological pollutants can also affect the structural integrity of the building itself.

Among the most common indoor pollutants is Volatile Organic Compounds (VOC), which are carbon-based compounds that evaporate easily. These types of gases include hair sprays, paints, lacquers, finishes, cleaning solvents, pesticides, etc. and are released (outgassed) from building materials, carpets, furniture, etc. VOC can also sensitize certain people to react to them.

In short, the absence of, or insufficient ventilation, leads to improper airflow and coupled with the presence of pollutants, results in oxygen deficiency, which is detrimental to human health.

With growing awareness of the role of ventilation in improving indoor air quality, KDK Ventilating Fans ensure proper indoor air circulation and exchange between indoor and outdoor air, thus reducing the presence of harmful pollutants in the air we breathe.

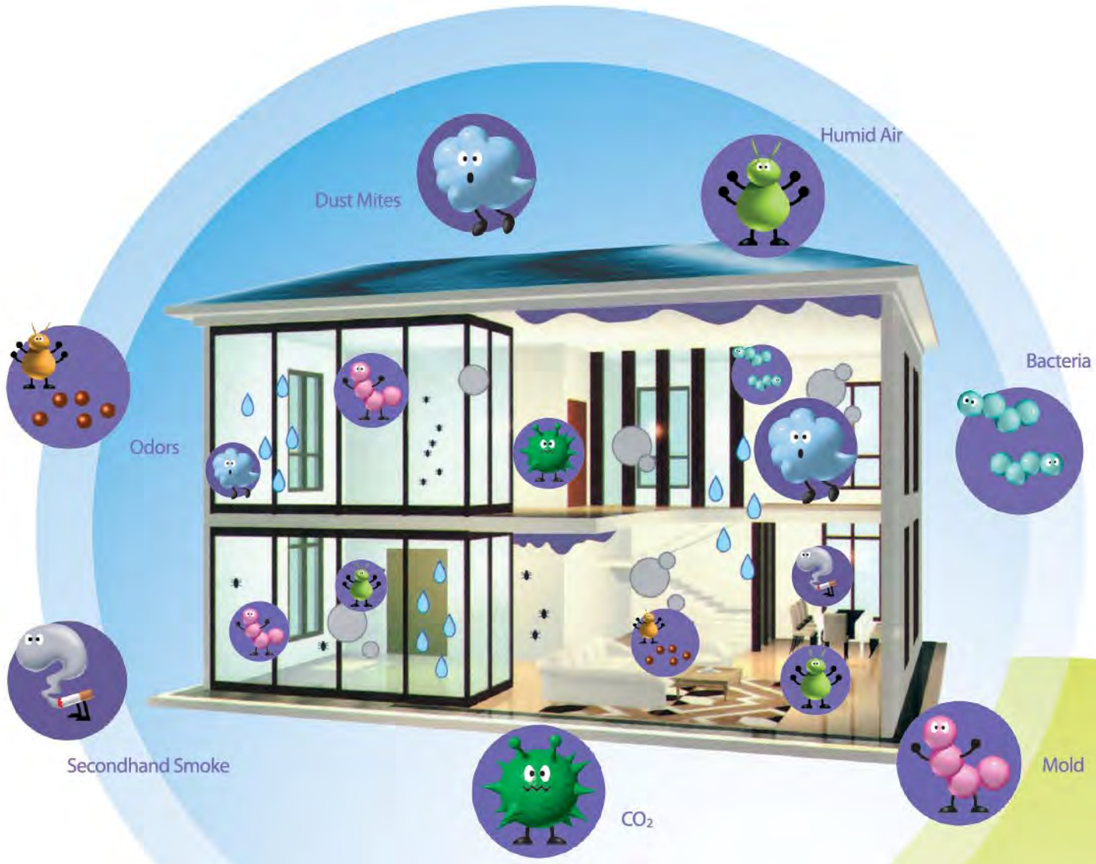

Hazardous indoor chemicals can be categorized into 3 groups

CHEMICAL POLLUTANT	ORIGIN
1. Formaldehyde	Paints, Adhesives, Ceiling Tiles
2. Volatile Organic Compounds	
a) Toluene, Xylene, Trimethylbenzene	Paints, Varnishes, Floor coverings, Furniture
b) TCEP (Tris 2-Chloroethyl) Phosphate	Carpet, Textiles, Foam
3. Organic Phosphates	Pesticides

Recommended Application

Low noise type Cabinet Fan (In-Line Fan) and
Ceiling Mount Type Ventilating Fan can be used
for ventilation in various environments,
such as residences, office and hotels

Residences

- Low Noise Type Cabinet Fan
- Ceiling Mount Ventilating Fan
- Intake Grille
- Exhaust Grille
- Vent Cap / Pipe Hood
- Exhaust
- Intake

Offices

- Low noise type Cabinet Fan
- Vent Cap / Pipe Hood
- Intake Grille
- Exhaust Grille

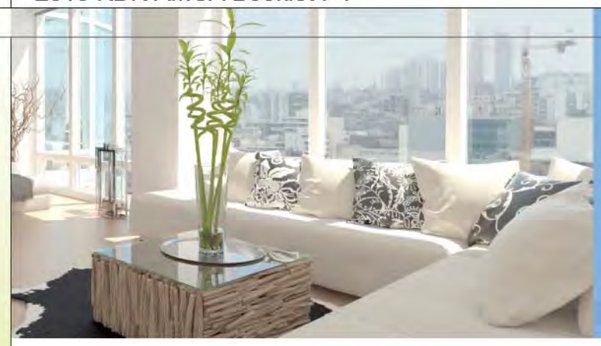

Ceiling Mount Type

Ventilating FAN

For SuperQuiet Series , Standard Series and DC Motor Series

Features

1 Long Life

Unique motor design accompanied by well-lubricated ball bearing reduces temperature rise and helps increase life of motor and prolong product durability.

2 High Efficiency

Tapered blade design effectively controls air turbulence. It helps achieve strong and smooth ventilating performance, as well as reduces the noise level *.
Seam-processed casing ensures strength and hermetic sealing.
Reverse flow prevention shutter results in further improvement of air tightness.

3 Super Low Noise

Distinctive structure of “Double Orifice” minimizes transmission of noise from fan and motor to exterior.
Resonance-Noise-Absorption technology further reduces noise during operation to incredibly low level (below 30dB(A)), which creates a tranquil and silent environment for your life*.

4 Easy Installation

Power cord is pre-installed in factory, just connect the cord to power supply for operation*.
Cassette type discharge adaptor facilitating installation of the product, as well as duct connecting work.

* Except Standard Series

5 Easy Maintenance

One touch louver allows easy installation and removal of louver.

Ceiling Mount Type
Ventilating FAN
For Metal Series

Features

Fire Resistant

24CMUA & 24CMHA

High Performance

- Sirocco fan sustains high static pressure induced by long duct and reduces noise level
- Unique seam-processed casing ensures strength and hermetic sealing
- Reverse flow prevention shutter results in further improvement of air tightness

Safe

- Motor equipped with thermal cut-off fuse prevents fire induced by overheat
- Metallic structure within air stream provides extra safety against fire*

Easy Installation & Maintenance

- Detachable duct adaptor makes installation simply
- Spring-lock louver allows easy removal for cleaning

Durable

- Painted steel frame enhances anti-rust capability
- HP (Half-pitch) motor incorporated with well lubricated ball bearing enables continuous operation for years

* Metallic structure can reduce the fire risk spread to other area from fire affected compartment through the ducting.

Ceiling Mount Type - **VENTILATING FAN MODEL**
(Super Quiet Series)

17CUG

- Super low noise design
- Long life ball bearing motor
- Taper blade sirocco fan
- Resonance-Noise-Absorption Structure
- Reverse flow prevention shutter
- Pre-installed power cord

Dimension

Unit: mm

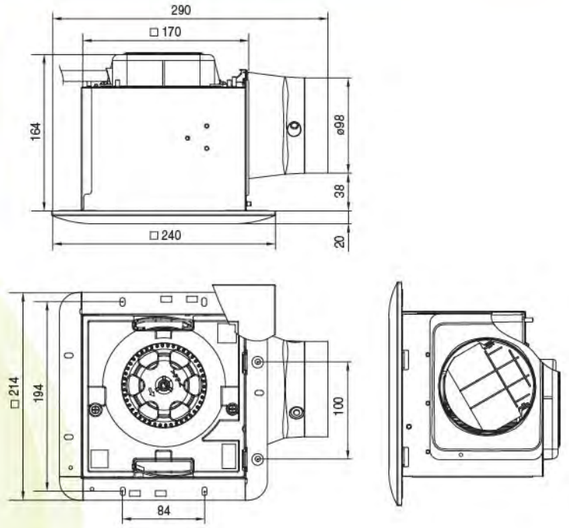

KDK Company, Division of PES and Panasonic Ecology Systems Guangdong Co., Ltd. certify that the Super Quiet Series models shown herein are licensed to bear the AMCA Seal. The ratings shown are based on tests and procedures performed in accordance with AMCA Publication 211 and AMCA Publication 311 and comply with the requirements of the AMCA Certified Ratings Program.

Specification

Model	Voltage	Frequency	CFM / SONE AT STATIC Pressure (ps-inches of H_2O)								RPM	Watts*	Watts**
			inches of H_2O	0	0.1	0.125	0.25	0.375	0.5	0.625			
17CUG	220V	60Hz	CFM	41	28	25	---	---	---	---	810	11	10
			Sones	0.3	0.5	0.6							
	240V	50Hz	CFM	50	43	40	---	---	---	---	780	12	10.5
			Sones	0.3	0.4	0.6							

Performance certified is for installation type B: Free inlet, Ducted outlet. Performance ratings include the effects of an inlet grille and backdraft shutter. Speed (RPM) shown is nominal. Performance is based on actual speed of test. The sound ratings shown are loudness values in fan sones at 5 ft. (1.5m) in a hemispherical free field calculated per AMCA International Standard 301. Values shown are for installation type B: Free inlet hemispherical sone levels.
* the Watts rating is only for AMCA test method and it is at the static pressure of 0 inch of H_2O.
** the Watts rating is only for IEC test method and the AMCA Certified Ratings Seal does not apply to IEC test method watts.

Ceiling Mount Type - **VENTILATING FAN MODEL**
(Super Quiet Series)

24CUG / 24CDG / 24CHG

- Super low noise design
- Long life ball bearing motor
- Taper blade sirocco fan
- Resonance-Noise-Absorption Structure
- Reverse flow prevention shutter
- Pre-installed power cord

Dimension

Unit: mm

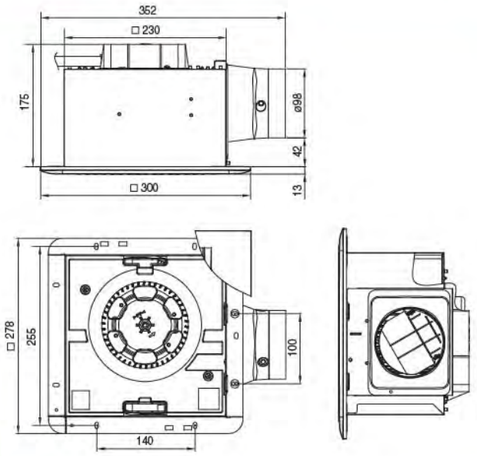

KDK Company, Division of PES and Panasonic Ecology Systems Guangdong Co., Ltd. certify that the Super Quiet Series models shown herein are licensed to bear the AMCA Seal. The ratings shown are based on tests and procedures performed in accordance with AMCA Publication 211 and AMCA Publication 311 and comply with the requirements of the AMCA Certified Ratings Program.

Specification

Model	Voltage	Frequency	CFM / SONE AT STATIC Pressure (ps-inches of H_2O)							RPM	Watts*	Watts**
			inches of H_2O	0	0.1	0.125	0.25	0.375	0.5	0.625			
24CUG	220V	60Hz	CFM	83	73	68	44	---	---	---	610	16	15.5
			Sones	0.5	0.6	0.6	1.4						
	240V	50Hz	CFM	88	77	75	51	---	---	---	680	15.1	14
			Sones	0.7	0.8	0.9	1.6						
24CDG	220V	60Hz	CFM	101	90	88	64	---	---	---	750	18.2	16.5
			Sones	0.7	0.8	0.9	1.5						
	240V	50Hz	CFM	105	91	86	64	---	---	---	780	18.6	17.5
			Sones	0.8	0.9	1.0	1.7						
24CHG	220V	60Hz	CFM	109	99	96	75	47	---	---	860	23.6	22
			Sones	1.0	1.2	1.2	1.5	2.4					
	240V	50Hz	CFM	116	100	94	72	33	---	---	890	23.5	22
			Sones	1.2	1.3	1.4	1.6	2.1					

Performance certified is for installation type B: Free inlet, Ducted outlet. Performance ratings include the effects of an inlet grille and backdraft shutter. Speed (RPM) shown is nominal. Performance is based on actual speed of test. The sound ratings shown are loudness values in fan sones at 5 ft. (1.5m) in a hemispherical free field calculated per AMCA International Standard 301. Values shown are for installation type B: Free inlet hemispherical sone levels.
* the Watts rating is only for AMCA test method and it is at the static pressure of 0 inch of H_2O.
** the Watts rating is only for IEC test method and the AMCA Certified Ratings Seal does not apply to IEC test method watts.

Ceiling Mount Type - **VENTILATING FAN MODEL**
(Super Quiet Series)

27CHH

- Super low noise design
- Long life ball bearing motor
- Taper blade sirocco fan
- Resonance-Noise-Absorption Structure
- Pre-installed power cord
- 2 speed selectable

Dimension

Unit: mm

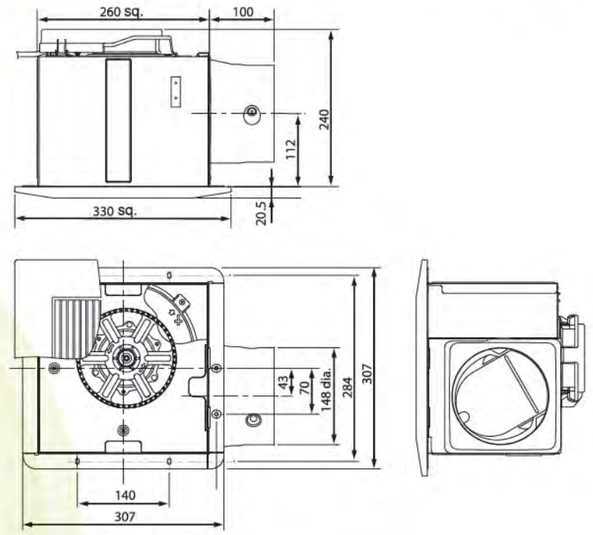

KDK Company, Division of PES and Panasonic Ecology Systems Guangdong Co., Ltd. certify that the Super Quiet Series models shown herein are licensed to bear the AMCA Seal. The ratings shown are based on tests and procedures performed in accordance with AMCA Publication 211 and AMCA Publication 311 and comply with the requirements of the AMCA Certified Ratings Program.

Specification

Model	Voltage	Frequency	Speed	CFM / SONE AT STATIC Pressure (ps-inches of H_2O)								RPM	Watts*	Watts**
				inches of H_2O	0	0.1	0.125	0.25	0.375	0.5	0.625			
27CHH	220V	60Hz	Hi	CFM	182	162	158	118	78	37	---	570	33	33
				Sones	1.1	1.2	1.3	1.7	2.2	2.5				
	240V	50Hz	Hi	CFM	198	179	172	126	78	18	---	609	37	34
				Sones	1.4	1.5	1.6	1.8	2.3	2.5				

Performance certified is for installation type B: Free inlet, Ducted outlet. Performance ratings include the effects of an inlet grille and backdraft shutter. Speed (RPM) shown is nominal. Performance is based on actual speed of test. The sound ratings shown are loudness values in fan sones at 5 ft. (1.5m) in a hemispherical free field calculated per AMCA International Standard 301. Values shown are for installation type B: Free inlet hemispherical sone levels.
* the Watts rating is only for AMCA test method and it is at the static pressure of 0 inch of H_2O.
** the Watts rating is only for IEC test method and the AMCA Certified Ratings Seal does not apply to IEC test method watts.

Ceiling Mount Type - **VENTILATING FAN MODEL**
(Super Quiet Series)

32CDH

- Super low noise design
- Long life ball bearing motor
- Taper blade sirocco fan
- Resonance-Noise-Absorption Structure
- Pre-installed power cord
- 2 speed selectable

Dimension

Unit:mm

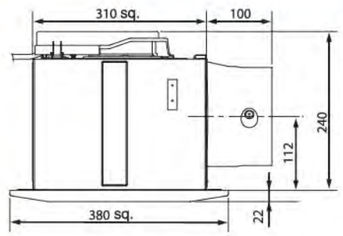

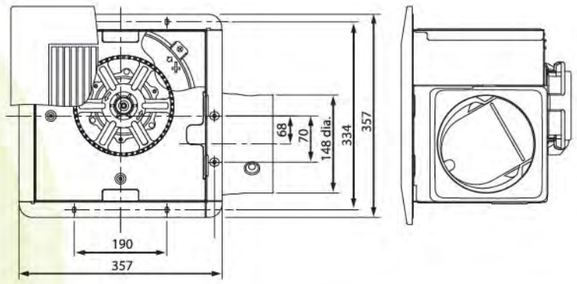

KDK Company, Division of PES and Panasonic Ecology Systems Guangdong Co., Ltd. certify that the Super Quiet Series models shown herein are licensed to bear the AMCA Seal. The ratings shown are based on tests and procedures performed in accordance with AMCA Publication 211 and AMCA Publication 311 and comply with the requirements of the AMCA Certified Ratings Program.

Specification

Model	Voltage	Frequency	Speed	CFM / SONE AT STATIC Pressure (ps-inches of H_2O)								RPM	Watts*	Watts**
				inches of H_2O	0	0.1	0.125	0.25	0.375	0.5	0.625			
32CDH	220V	60Hz	Hi	CFM	226	202	196	163	127	91	53	580	48	48
				Sones	1.2	1.3	1.4	1.7	2.2	2.7	3.3			
	240V	50Hz	Hi	CFM	257	236	230	192	147	99	53	675	56	50
				Sones	1.6	1.7	1.8	1.9	2.5	3.0	3.6			

Performance certified is for installation type B: Free inlet, Ducted outlet. Performance ratings include the effects of an inlet grille and backdraft shutter. Speed (RPM) shown is nominal. Performance is based on actual speed of test. The sound ratings shown are loudness values in fan sones at 5 ft. (1.5m) in a hemispherical free field calculated per AMCA International Standard 301. Values shown are for installation type B: Free inlet hemispherical sone levels.
* the Watts rating is only for AMCA test method and it is at the static pressure of 0 inch of H_2O.
** the Watts rating is only for IEC test method and the AMCA Certified Ratings Seal does not apply to IEC test method watts.

Ceiling Mount Type - **VENTILATING FAN MODEL**
(Standard Series)

38CDG / 38CDG 05

- High-Low speed selectable
- Condenser motor with thermal cut-off
- Well lubricated bearing for long life operation
- High performance sirocco fan

Dimension

Unit: mm

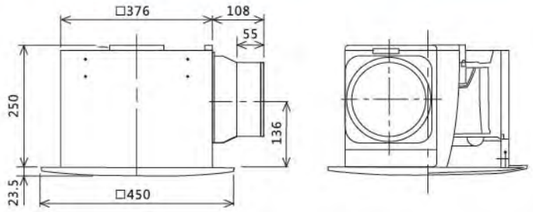

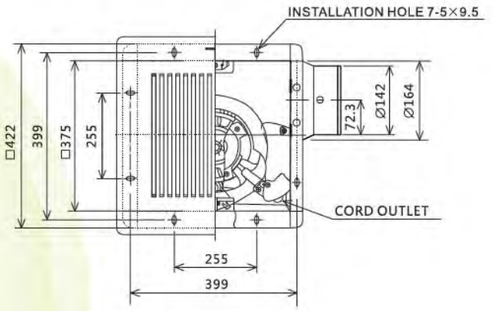

KDK Company, Division of PES and Panasonic Ecology Systems Guangdong Co., Ltd. certify that the Standard models shown herein are licensed to bear the AMCA Seal. The ratings shown are based on tests and procedures performed in accordance with AMCA Publication 211 and AMCA Publication 311 and comply with the requirements of the AMCA Certified Ratings Program.

Specification

Model	Voltage	Frequency	Speed	CFM / SONE AT STATIC Pressure (ps-inches of H_2O)											RPM	Watts*	Watts**
				inches of H_2O	0	0.1	0.125	0.25	0.375	0.5	0.625	0.75	0.875				
38CDG	220V	60Hz	Hi	CFM	344	323	317	290	261	230	197	163	126		626	98	98
				Sones	3.1	3.2	3.2	3.3	3.6	4.1	4.5	5.7	5.7				
38CDG 05 38CDG	240V	50Hz	Hi	CFM	387	367	362	336	305	259	212	165	108		737	118	104
				Sones	4.0	4.1	4.2	4.3	4.4	4.7	5.3	5.7	6.2				

Performance certified is for installation type B: Free inlet, Ducted outlet. Performance ratings include the effects of an inlet grille and backdraft shutter. Speed (RPM) shown is nominal. Performance is based on actual speed of test. The sound ratings shown are loudness values in fan sones at 5 ft. (1.5m) in a hemispherical free field calculated per AMCA International Standard 301. Values shown are for installation type B: Free inlet hemispherical sone levels.
* the Watts rating is only for AMCA test method and it is at the static pressure of 0 inch of H_2O.
** the Watts rating is only for IEC test method and the AMCA Certified Ratings Seal does not apply to IEC test method watts.

Ceiling Mount Type - **VENTILATING FAN MODEL**
(DC Motor Series)

24JRB

- DC (Direct Current) motor
- Auto operation by motion sensor
- Constant airflow
- Variable air volume
- Delay timer (15 minutes)
- Resonance-Noise-Absorption Structure

Dimension

Unit: mm

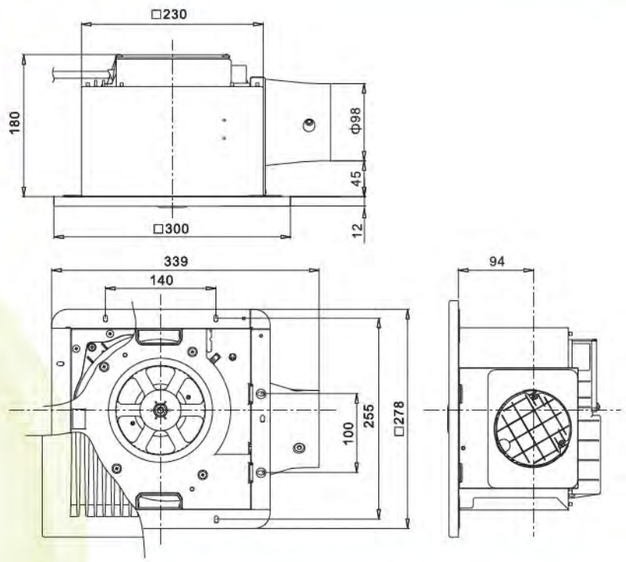

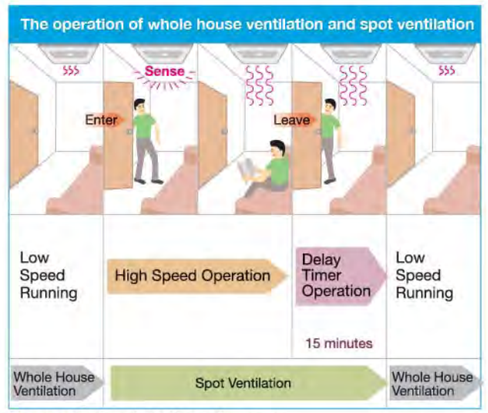

The operation is activated by motion sensor.

KDK Company, Division of PES and Panasonic Ecology Systems Guangdong Co., Ltd. certify that the DC Motor models shown herein are licensed to bear the AMCA Seal. The ratings shown are based on tests and procedures performed in accordance with AMCA Publication 211 and AMCA Publication 311 and comply with the requirements of the AMCA Certified Ratings Program.

Specification

Model	Voltage	Frequency	Speed	CFM / SONE AT STATIC Pressure (ps-inches of H_2O)										RPM	Watts*	Watts**
				inches of H_2O	0	0.1	0.125	0.25	0.375	0.5	0.625	0.75	0.875			
24JRB	220V	60Hz	Hi	CFM	88	88	88	88	63	34	5	---	--	853	10	8
				Sones	0.7	1.0	1.0	1.3	1.7	1.8	3.1	---	----			
	240V	50Hz	Hi	CFM	88	88	88	88	63	34	5	---	---			
				Sones	0.7	1.0	1.0	1.3	1.7	1.8	3.1	---	---			

Performance certified is for installation type B: Free inlet, Ducted outlet. Performance ratings include the effects of an inlet grille and backdraft shutter. Speed (RPM) shown is nominal. Performance is based on actual speed of test. The sound ratings shown are loudness values in fan sones at 5 ft. (1.5m) in a hemispherical free field calculated per AMCA International Standard 301. Values shown are for installation type B: Free inlet hemispherical sone levels.
* the Watts rating is only for AMCA test method and it is at the static pressure of 0 inch of H_2O.
** the Watts rating is only for IEC test method and the AMCA Certified Ratings Seal does not apply to IEC test method watts.

Ceiling Mount Type - **VENTILATING FAN MODEL**
(DC Motor Series)

24JAB

- DC (Direct Current) motor
- Constant airflow
- Variable air volume
- Delay timer (15 minutes)
- Resonance-noise-Absorption Structure

Dimension

Unit: mm

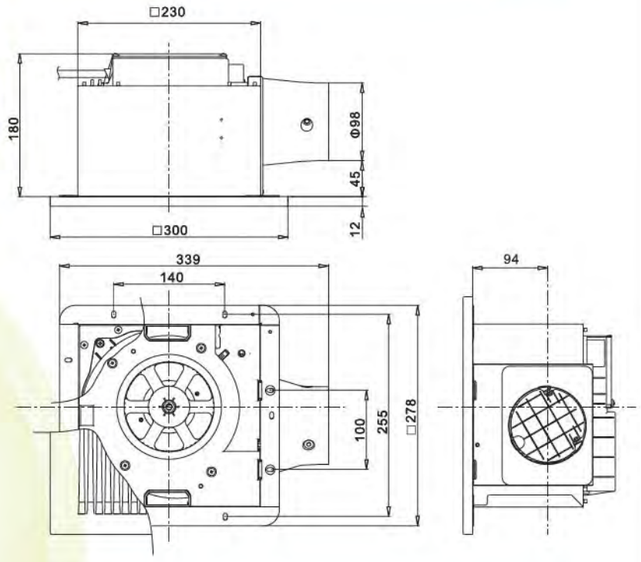

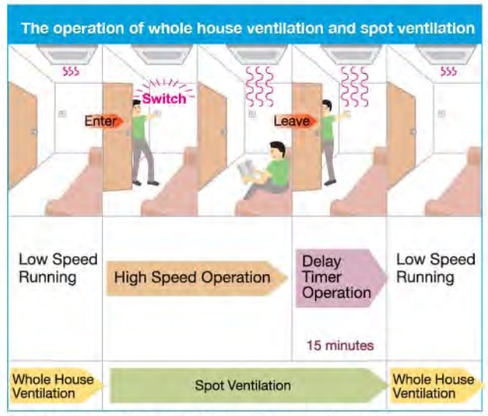

The operation can be activated by switch on and off manually.

KDK Company, Division of PES and Panasonic Ecology Systems Guangdong Co., Ltd. certify that the DC Motor models shown herein are licensed to bear the AMCA Seal. The ratings shown are based on tests and procedures performed in accordance with AMCA Publication 211 and AMCA Publication 311 and comply with the requirements of the AMCA Certified Ratings Program.

Specification

Model	Voltage	Frequency	Speed	CFM / SONE AT STATIC Pressure (ps-inches of H_2O)										RPM	Watts*	Watts**
				inches of H_2O	0	0.1	0.125	0.25	0.375	0.5	0.625	0.75	0.875			
24JAB	220V	60Hz	Hi	CFM	88	88	88	88	63	34	5	---	--	839	10	8
				Sones	0.6	0.9	1.0	1.4	1.6	1.9	3.2	---	----			
	240V	50Hz	Hi	CFM	88	88	88	88	63	34	5	---	---			
				Sones	0.6	0.9	1.0	1.4	1.6	1.9	3.2	---	---			

Performance certified is for installation type B: Free inlet, Ducted outlet. Performance ratings include the effects of an inlet grille and backdraft shutter. Speed (RPM) shown is nominal. Performance is based on actual speed of test. The sound ratings shown are loudness values in fan sones at 5 ft. (1.5m) in a hemispherical free field calculated per AMCA International Standard 301. Values shown are for installation type B: Free inlet hemispherical sone levels.
* the Watts rating is only for AMCA test method and it is at the static pressure of 0 inch of H_2O.
** the Watts rating is only for IEC test method and the AMCA Certified Ratings Seal does not apply to IEC test method watts.

Ceiling Mount Type - **VENTILATING FAN MODEL**
(Metal Series)

24CMUA/ 24CMHA

Fire Resistant

Dimension

Unit: mm

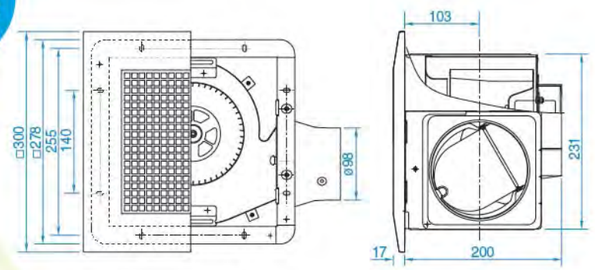

- All metal structure design
- Long life ball bearing motor
- Metallic components within air stream provides extra safety against fire
- Reverse flow prevention shutter

KDK Company, Division of PES and Panasonic Ecology Systems Guangdong Co., Ltd. certify that the Metal Series models shown herein are licensed to bear the AMCA Seal. The ratings shown are based on tests and procedures performed in accordance with AMCA Publication 211 and AMCA Publication 311 and comply with the requirements of the AMCA Certified Ratings Program.

Specification

Model	Voltage	Frequency	CFM / SONE AT STATIC Pressure (ps-inches of H_2O)								RPM	Watts*	Watts**
			inches of H_2O	0	0.1	0.125	0.25	0.375	0.5	0.625			
24CMUA	220V	60Hz	CFM	55	40	37	20	---	---	---	495	13	12
			Sones	0.3	0.7	0.8	1.6						
	240V	50Hz	CFM	55	44	41	24	---	---	---	562	14	13
			Sones	0.3	0.8	1.0	1.4						
24CMHA	220V	60Hz	CFM	94	85	83	72	54	---	---	681	25	23
			Sones	1.0	1.4	1.5	1.9	2.3					
	240V	50Hz	CFM	108	98	95	77	44	---	---	753	27	25
			Sones	1.4	1.8	1.9	2.1	2.2					

Performance certified is for installation type B: Free inlet, Ducted outlet. Performance ratings include the effects of an inlet grille and backdraft shutter. Speed (RPM) shown is nominal. Performance is based on actual speed of test. The sound ratings shown are loudness values in fan sones at 5 ft. (1.5m) in a hemispherical free field calculated per AMCA International Standard 301. Values shown are for installation type B: Free inlet hemispherical sone levels.
* the Watts rating is only for AMCA test method and it is at the static pressure of 0 inch of H_2O.
** the Watts rating is only for IEC test method and the AMCA Certified Ratings Seal does not apply to IEC test method watts.

Ceiling Mount Type - **VENTILATING FAN MODEL**
(Metal Series)

27CMHA

Fire Resistant

Dimension

Unit: mm

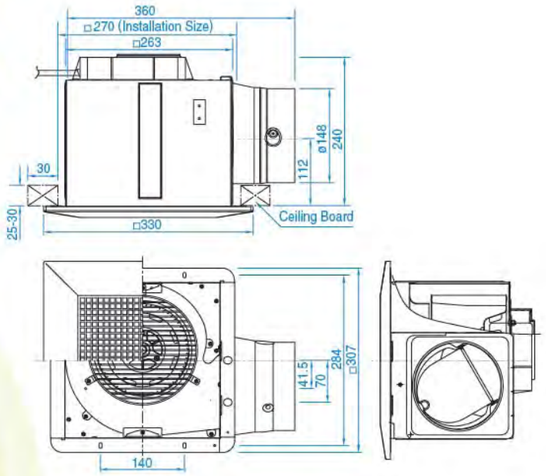

- All metal structure design
- Long life ball bearing motor
- Metallic components within air stream provides extra safety against fire
- Reverse flow prevention shutter

KDK Company, Division of PES and Panasonic Ecology Systems Guangdong Co., Ltd. certify that the Metal Series models shown herein are licensed to bear the AMCA Seal. The ratings shown are based on tests and procedures performed in accordance with AMCA Publication 211 and AMCA Publication 311 and comply with the requirements of the AMCA Certified Ratings Program.

Specification

Model	Voltage	Frequency	CFM / SONE AT STATIC Pressure (ps-inches of H_2O)								RPM	Watts*	Watts**
			inches of H_2O	0	0.1	0.125	0.25	0.375	0.5	0.625			
27CMHA	220V	60Hz	CFM	208	184	178	144	108	79	---	615	46	43
			Sones	1.6	1.7	1.7	2.3	3.2	3.5				
	240V	50Hz	CFM	219	194	188	150	110	70	---	669	46	43
			Sones	1.9	1.9	2.0	2.4	3.4	3.1				

Performance certified is for installation type B: Free inlet, Ducted outlet. Performance ratings include the effects of an inlet grille and backdraft shutter. Speed (RPM) shown is nominal. Performance is based on actual speed of test. The sound ratings shown are loudness values in fan sones at 5 ft. (1.5m) in a hemispherical free field calculated per AMCA International Standard 301. Values shown are for installation type B: Free inlet hemispherical sone levels.
* the Watts rating is only for AMCA test method and it is at the static pressure of 0 inch of H_2O.
** the Watts rating is only for IEC test method and the AMCA Certified Ratings Seal does not apply to IEC test method watts.

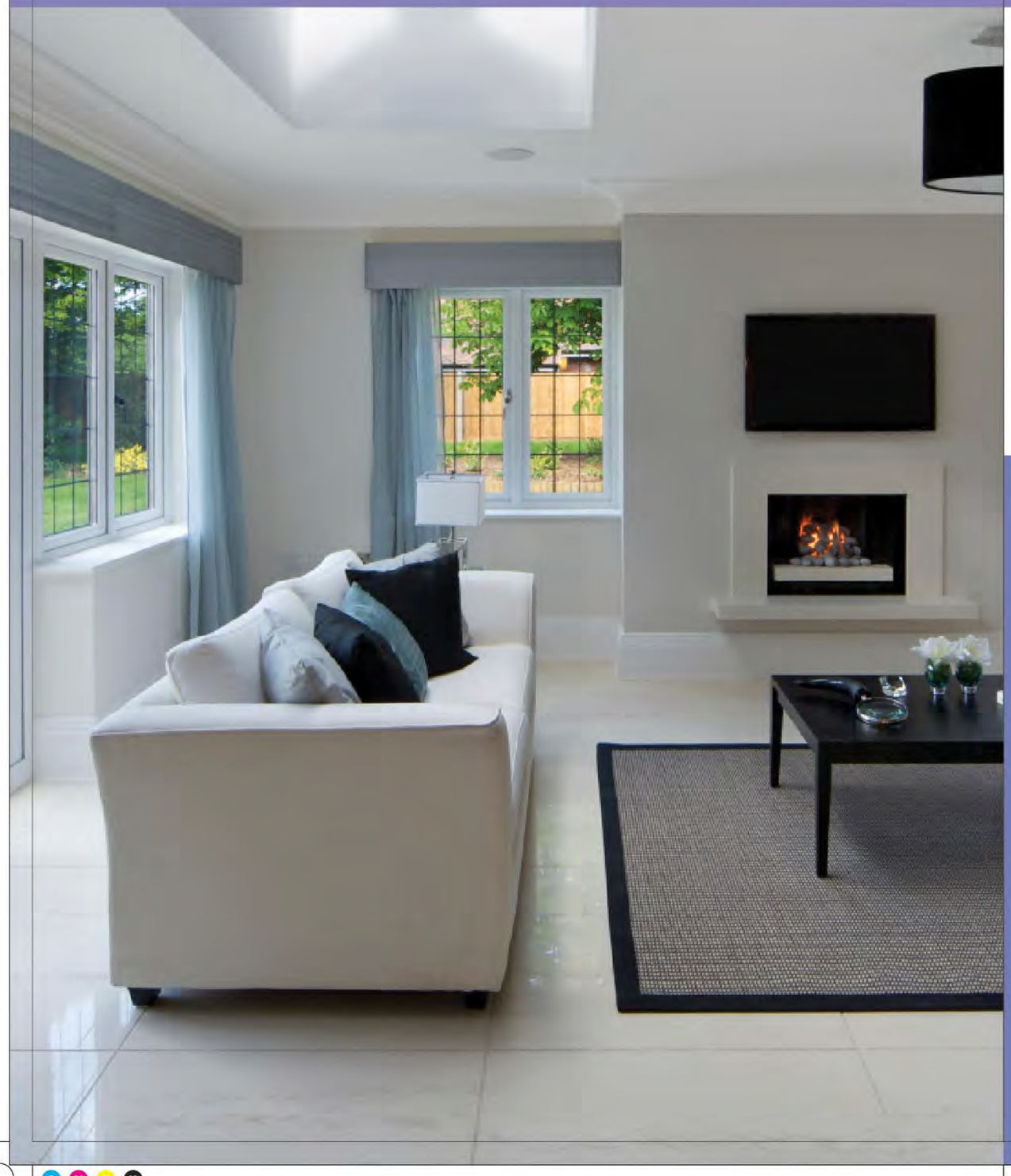

Low Noise Type

CABINET FAN

(In-line Fan)

Introduction

These are ducted ventilating fans with intake and exhaust outlets opening to the interior and exterior of the house respectively. They can be used as single port or multi port to exhaust air from several areas with one unit. Since only a small ventilation opening is required, the appearance of the interior is not spoiled.

All models are manufactured from galvanized steel enhancing high durability. The unique suction fan design and acoustic noise absorbing material realize low noise operation. The high performance induction motor offers low energy consumption, long life and high reliability.

The slim, compact and light-weight structure allows easy installation in narrow ceiling space. The installation direction of the fans can be chosen to facilitate easy access to the terminal and inspection opening. Specially designed U-grooved mounting brackets prevent mounting bolts from loosening, thus reinforcing installation safety.

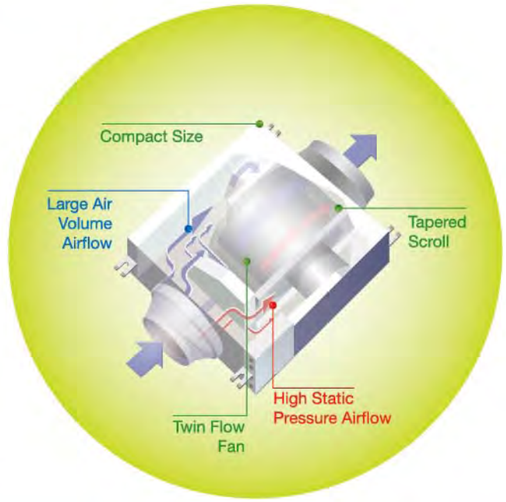

Features

Twin Flow Fan

The newly developed twin flow fan achieves a better airflow inside the fan casing. It is divided into two portions which can generate large air volume and high static pressure respectively.

Tapered Scroll

Wind velocity varies according to the shape of the casing. The tapered scroll at the casing minimizes turbulence induced by uneven wind velocity inside the casing.

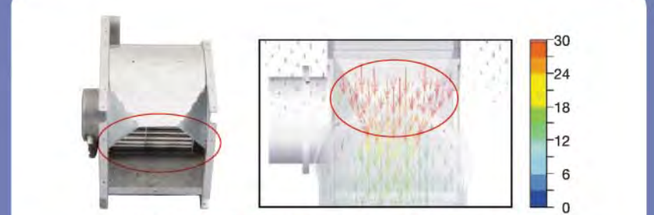

Internal Wind Velocity Distribution – Airflow Analysis

Low Noise Type
CABINET FAN

Embedded Terminal Box

Terminal box is embedded into the product frame. Wiring to power supply are covered with metal enclosure that enhances the durability and safety concern.

High Static Pressure

The distinctive design of twin flow fan and fan casing enable operation with high static pressure - approximately 10% average increase when compared with previous models, it surely increases flexibility for your planning of ventilation system.

Energy Saving

The new structure design, improves fan performance by increasing energy efficiency by 3%. In addition, energy saving is assured by reducing motor power consumption significantly.

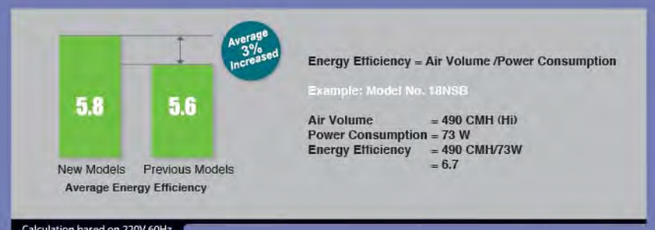

Compact Size

With the newly designed structure, the product size is reduced by 9% increasing flexibility for installation.

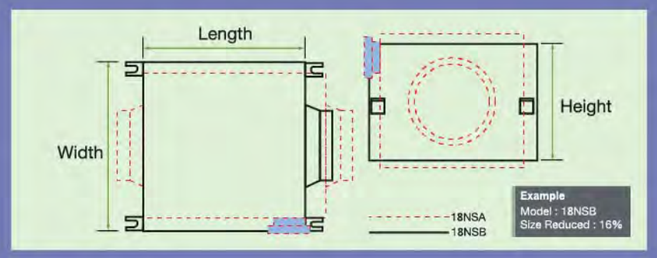

Noise Reduction

With the twin flow fan and fan casing structure, the new models minimize the transmission of noise and reduce it by 6% while maintaining airflow volume. This technology creates a more tranquil and pleasant environment.

Calculation based on 220V 60Hz

Easy Installation

A slim, compact and light body allows easy installation in narrow ceiling space, when compared with previous models.

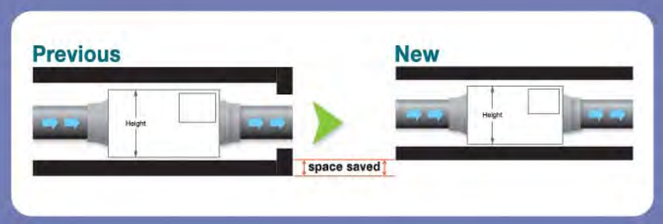

LOW NOISE TYPE - **CABINET FAN MODEL**

12NSB / 15NSB

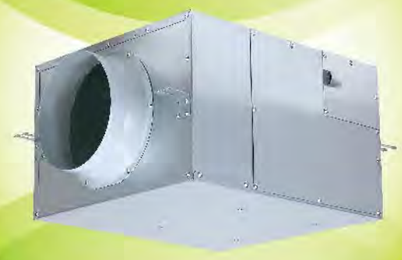

- Long life condenser motor with thermal cut-off
- Twin flow fan (sirocco fan)
- Fan casing with tapered scroll
- Embedded terminal box
- Noise absorption material adopted
- Compact size

Dimension

Unit: mm

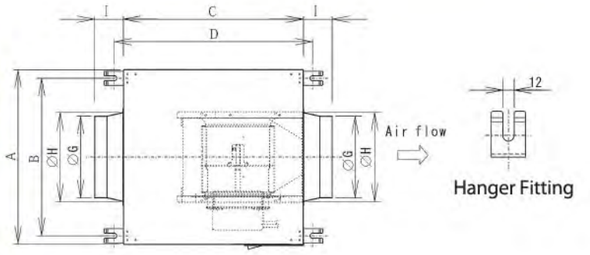

Model	A	B	C	D	E	F	G	H	I
12NSB	290	250	291	335	184	92	97	112	51
15NSB	290	250	302	346	206	103	145	163	60

KDK Company, Division of PES and Panasonic Ecology Systems Guangdong Co., Ltd. certify that the low noise series cabinet fan models shown herein are licensed to bear the AMCA Seal. The ratings shown are based on tests and procedures performed in accordance with AMCA Publication 211 and AMCA Publication 311 and comply with the requirements of the AMCA Certified Ratings Program.

Specification

Model	Voltage	Frequency	Speed	CFM / SONE AT STATIC Pressure (ps-inches of H_2O)											RPM	Watts*	Watts**
				inches of H_2O	0	0.1	0.125	0.25	0.375	0.5	0.75	1	1.25	1.5			
12NSB	220V	60Hz	Hi	CFM	114	105	102	87	65			–			1,460	26	23
				Sones	1.5	1.4	1.4	1.3	1.4			–					
	240V	50Hz	Hi	CFM	102	90	86	67	39			–			1,342	27	22
				Sones	2.0	1.7	1.6	1.4	1.5			–					
15NSB	220V	60Hz	Hi	CFM	200	183	177	149	118	83			–		1,520	45	42
				Sones	2.7	2.5	2.4	2.3	2.2	2.0			–				
	240V	50Hz	Hi	CFM	193	177	172	139	94	20			–		1,373	47	37
				Sones	3.7	3.4	3.2	2.6	2.5	2.8			–				

Performance certified is for installation type D: Ducted inlet, Ducted outlet.
Performance ratings do not include the effects of appurtenances (accessories). Speed (RPM) shown is nominal.
Performance is based on actual speed of test. The sound ratings shown are loudness values in fan sones at 5 ft (1.5m) in a hemispherical free field calculated per AMCA International Standard 301.
Values shown are for installation Type D: ducted inlet hemispherical sone levels. Ratings do not include the effect of duct end correction.
* the Watts rating is only for AMCA test method and it is at the static pressure of 0 inch of H_2O.
** the Watts rating is only for IEC test method and the AMCA Certified Ratings Seal does not apply to IEC test method watts.

LOW NOISE TYPE - **CABINET FAN MODEL**

18NSB / 18NFB

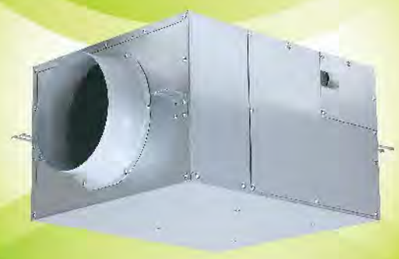

- Long life condenser motor with thermal cut-off
- Twin flow fan (sirocco fan)
- Fan casing with tapered scroll
- Embedded terminal box
- Noise absorption material adopted
- Compact size

Dimension

Unit: mm

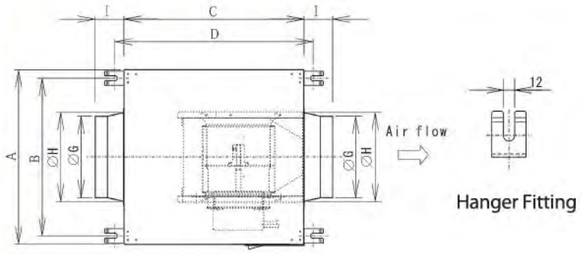

Model	A	B	C	D	E	F	G	H	I
18NSB	316	276	338	382	232	116	145	163	60
18NFB	376	336	397	441	254	127	195	211	70

KDK Company, Division of PES and Panasonic Ecology Systems Guangdong Co., Ltd. certify that the low noise series cabinet fan models shown herein are licensed to bear the AMCA Seal. The ratings shown are based on tests and procedures performed in accordance with AMCA Publication 211 and AMCA Publication 311 and comply with the requirements of the AMCA Certified Ratings Program.

Specification

Model	Voltage	Frequency	Speed	CFM / SONE AT STATIC Pressure (ps-inches of H_2O)											RPM	Watts*	Watts**
				inches of H_2O	0	0.1	0.125	0.25	0.375	0.5	0.75	1	1.25	1.5			
18NSB	220V	60Hz	Hi	CFM	274	261	258	241	222	196	137	–			1,470	80	73
				Sones	3.3	3.1	3.0	2.9	2.7	2.6	2.7	–					
	240V	50Hz	Hi	CFM	281	263	259	232	200	163	34	–			1,342	84	68
				Sones	4.8	4.4	4.4	3.8	3.4	3.0	2.9	–					
18NFB	220V	60Hz	Hi	CFM	417	399	395	373	347	318	237	–			1,420	128	119
				Sones	4.0	3.9	3.9	3.9	3.6	3.5	3.4	–					
	240V	50Hz	Hi	CFM	429	406	400	381	344	290	78	–			1,327	135	104
				Sones	5.6	5.4	5.4	5.1	4.6	4.3	4.2	–					

Performance certified is for installation type D: Ducted inlet, Ducted outlet.
Performance ratings do not include the effects of appurtenances (accessories). Speed (RPM) shown is nominal.
Performance is based on actual speed of test. The sound ratings shown are loudness values in fan sones at 5 ft (1.5m) in a hemispherical free field calculated per AMCA International Standard 301.
Values shown are for installation Type D: ducted inlet hemispherical sone levels. Ratings do not include the effect of duct end correction.
* the Watts rating is only for AMCA test method and it is at the static pressure of 0 inch of H_2O.
** the Watts rating is only for IEC test method and the AMCA Certified Ratings Seal does not apply to IEC test method watts.

LOW NOISE TYPE - **CABINET FAN MODEL**

20NSB / 23NLB

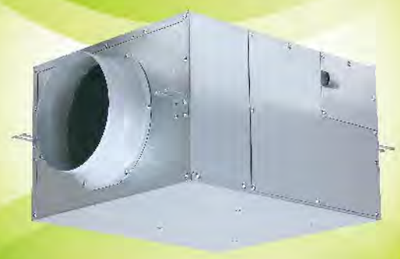

- Long life condenser motor with thermal cut-off
- Twin flow fan (sirocco fan)
- Fan casing with tapered scroll
- Embedded terminal box
- Noise absorption material adopted
- Compact size

Dimension

Unit: mm

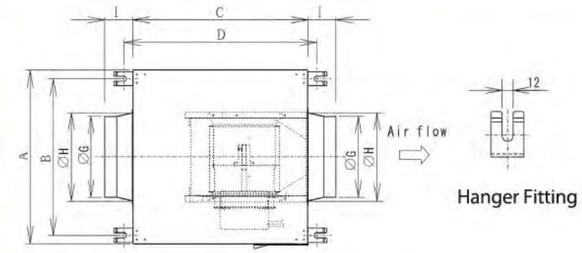

Model	A	B	C	D	E	F	G	H	I
20NSB	416	376	441	485	272	136	195	211	70
23NLB	468	424	469	513	298	149	195	211	70

KDK Company, Division of PES and Panasonic Ecology Systems Guangdong Co., Ltd. certify that the low noise series cabinet fan models shown herein are licensed to bear the AMCA Seal. The ratings shown are based on tests and procedures performed in accordance with AMCA Publication 211 and AMCA Publication 311 and comply with the requirements of the AMCA Certified Ratings Program.

Specification

Model	Voltage	Frequency	Speed	CFM / SONE AT STATIC Pressure (ps-inches of H_2O)											RPM	Watts*	Watts**
				inches of H_2O	0	0.1	0.125	0.25	0.375	0.5	0.75	1	1.25	1.5			
20NSB	220V	60Hz	Hi	CFM	469	459	456	444	433	413	354	275	–		1,380	170	159
				Sones	4.0	4.0	3.9	3.8	3.9	4.0	4.1	4.2	–				
	240V	50Hz	Hi	CFM	517	500	495	464	424	382	265	110	–		1,328	175	135
				Sones	6.0	5.8	5.8	5.4	5.1	4.8	4.5	4.5	–				
23NLB	220V	60Hz	Hi	CFM	655	642	640	625	611	597	555	505	440	–	1,400	350	310
				Sones	6.0	6.0	5.9	5.9	5.7	5.7	5.8	5.8	5.8	–			
	240V	50Hz	Hi	CFM	688	670	664	642	614	579	493	388	199	–	1,342	347	260
				Sones	8.8	8.6	8.4	8.1	8.0	7.6	7.2	6.7	6.6	–			

Performance certified is for installation type D: Ducted inlet, Ducted outlet.
Performance ratings do not include the effects of appurtenances (accessories). Speed (RPM) shown is nominal.
Performance is based on actual speed of test. The sound ratings shown are loudness values in fan sones at 5 ft (1.5m) in a hemispherical free field calculated per AMCA International Standard 301.
Values shown are for installation Type D: ducted inlet hemispherical sone levels. Ratings do not include the effect of duct end correction.
* the Watts rating is only for AMCA test method and it is at the static pressure of 0 inch of H_2O.
** the Watts rating is only for IEC test method and the AMCA Certified Ratings Seal does not apply to IEC test method watts.

LOW NOISE TYPE - **CABINET FAN MODEL**

25NSB / 25NFB

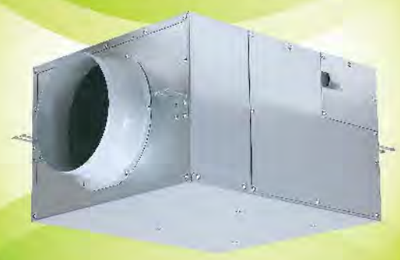

- Long life condenser motor with thermal cut-off
- Twin flow fan (sirocco fan)
- Fan casing with tapered scroll
- Embedded terminal box
- Noise absorption material adopted
- Compact size

Dimension

Unit: mm

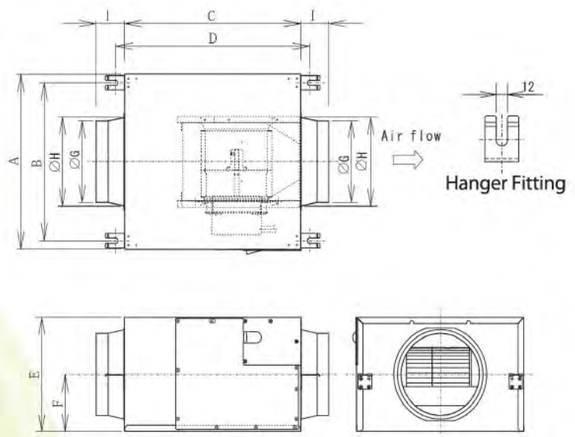

Model	A	B	C	D	E	F	G	H	I
25NSB	494	450	505	549	334	167	240	255	85
25NFB	494	450	505	549	334	167	240	255	85

KDK Company, Division of PES and Panasonic Ecology Systems Guangdong Co., Ltd. certify that the low noise series cabinet fan models shown herein are licensed to bear the AMCA Seal. The ratings shown are based on tests and procedures performed in accordance with AMCA Publication 211 and AMCA Publication 311 and comply with the requirements of the AMCA Certified Ratings Program.

Specification

Model	Voltage	Frequency	Speed	CFM / SONE AT STATIC Pressure (ps-inches of H_2O)										RPM	Watts*	Watts**
				inches of H_2O	0	0.1	0.125	0.25	0.375	0.5	0.75	1	1.25	1.5			
25NSB	220V	60Hz	Hi	CFM	940	924	919	899	877	857	790	710	610	502	1,380	460	425
				Sones	7.1	7.1	7.1	7.0	6.8	6.8	6.7	6.7	6.7	6.9			
	240V	50Hz	Hi	CFM	963	938	935	906	868	822	719	567	395	–	1,305	481	370
				Sones	10.1	9.8	9.7	9.3	9.2	8.8	8.0	7.5	8.2				
25NFB	220V	60Hz	Hi	CFM	1,016	1,000	995	975	954	933	875	803	710	590	1,420	680	520
				Sones	8.2	8.2	8.2	8.2	7.9	7.9	7.8	7.6	7.5	7.5			
	240V	50Hz	Hi	CFM	1,057	1,048	1,040	1,010	972	922	811	660	473	–	1,330	537	430
				Sones	12.1	11.9	11.5	11.1	10.6	9.8	8.7	8.7	10.3				

Performance certified is for installation type D: Ducted inlet, Ducted outlet.
Performance ratings do not include the effects of appurtenances (accessories). Speed (RPM) shown is nominal.
Performance is based on actual speed of test. The sound ratings shown are loudness values in fan sones at 5 ft (1.5m) in a hemispherical free field calculated per AMCA International Standard 301.
Values shown are for installation Type D: ducted inlet hemispherical sone levels. Ratings do not include the effect of duct end correction.
* the Watts rating is only for AMCA test method and it is at the static pressure of 0 inch of H_2O.
** the Watts rating is only for IEC test method and the AMCA Certified Ratings Seal does not apply to IEC test method watts.

LOW NOISE TYPE - **CABINET FAN MODEL**
(Three Phase Series)

25SWC / 25SMC

- Long life condenser motor with thermal cut-off
- Twin flow fan (sirocco fan)
- Fan casing with tapered scroll
- Embedded terminal box
- Noise absorption material adopted
- Compact size

Dimension

Unit: mm

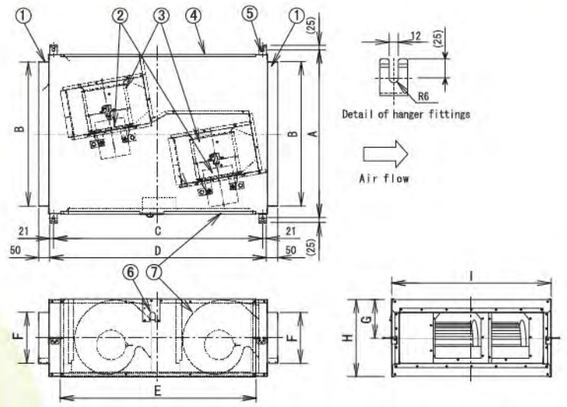

Model	A	B	C	D	E	F	G	H	I
25SWC	809	496	1,010	1,052	942	246	185	370	766
25SMC	809	696	1,010	1,052	942	246	185	370	766

Performance Data [380V 50/60Hz]

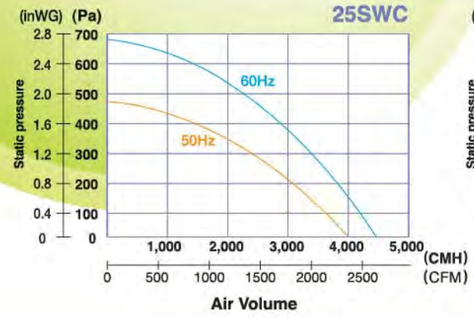

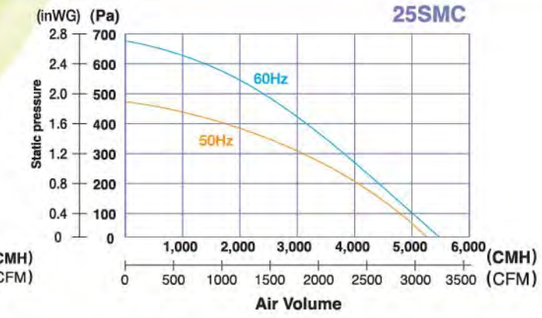

Specification

Model No.	Phase	Voltage [V]	Frequency [Hz]	Consumption [W]	RPM [min⁻¹]	Air Volume [CMH]	Air Volume [CFM]	Noise [dB(A)]	Weight [kg]	Duct Size [mm]	Impeller Diameter [mm]
25SWC	3	380	50	940	1,375	4,000	2,354	43	60	250 x 500	250
			60	1,450	1,530	4,500	2,648	45			
25SMC	3	380	50	1,180	1,345	5,200	3,060	45	60	250 x 700	250
			60	1,750	1,470	5,500	3,237	46			

Note: The value in specification tables are representative characteristic value at 380V 50/60Hz
RPM data is for reference only. Values may vary subject to different conditions.

LOW NOISE TYPE - **CABINET FAN MODEL**
(Three Phase Series)

28NXC

- Long life condenser motor with thermal cut-off
- Twin flow fan (sirocco fan)
- Fan casing with tapered scroll
- Embedded terminal box
- Noise absorption material adopted
- Compact size

Dimension

Unit: mm

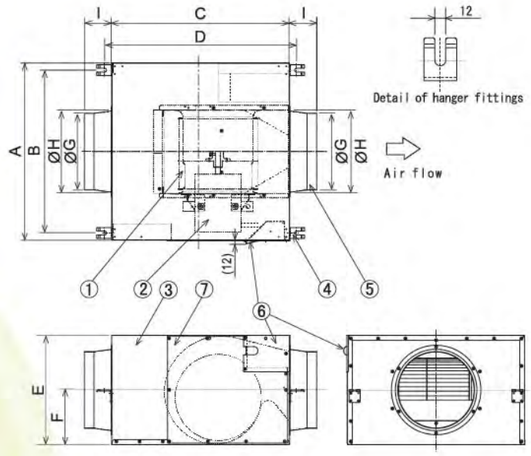

Model	A	B	C	D	E	F	G	H	I
28NXC	554	510	557	601	342	171	240	255	85

Performance Data [380V 50/60Hz]

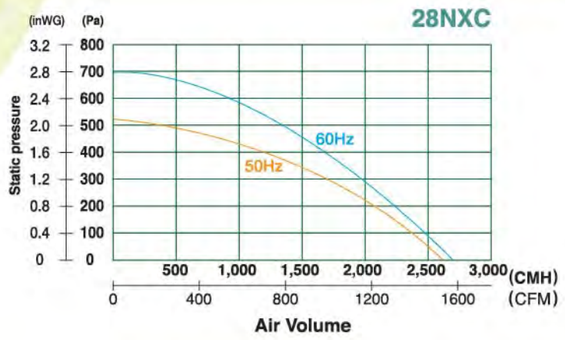

Specification

Model No.	Phase	Voltage [V]	Frequency [Hz]	Consumption [W]	RPM [min⁻¹]	Air Volume [CMH]	Air Volume [CFM]	Noise [dB(A)]	Weight [kg]	Duct Size [mm]	Impeller Diameter [mm]
28NXC	3	380	50	600	1,295	2,600	1,530	44	28	ø250	280
			60	840	1,380	2,650	1,560	45			

Note: The value in specification tables are representative characteristic value at 380V 50/60Hz
RPM data is for reference only. Values may vary subject to different conditions.

Industrial Type
Ventilating FAN

Introduction

Industrial Ventilating Fan can be used in factories, warehouses, shops, commercial kitchens and other places where large air change is necessary. Particular models are applicable for the places being ventilated by duct pipe where the fan encounters high static pressure.

High Static Pressure, Low Power Consumption

The newly developed fan and original bell mouth construction enable operation with high static pressure and low power consumption.

Low-Noise Design

The fan blade's distinctive wave shape, developed using hydrodynamic analysis, delivers a smooth, turbulence-free airflow. The result is more air with less noise.

Fan with 3-dimensional S-shaped Cross-section Blade

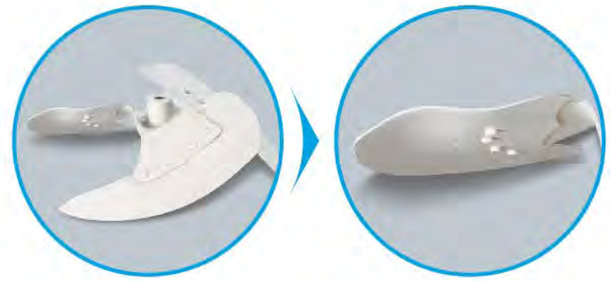

High Durability

Pressure is distributed more uniformly over the surface of the new fan blade, making the blade more durable.

A special polyester resin and powder coating give a beautiful color and a highly rust-resistant finish.

Surface Velocity Vector Diagram

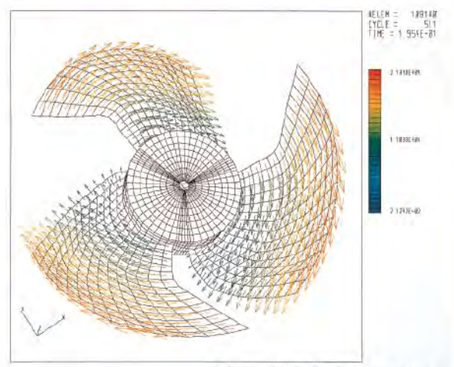

Industrial Type - **VENTILATING FAN**
(High Pressure Series)

25GSE / 30GSE / 35GSE

Dimension

Unit: mm

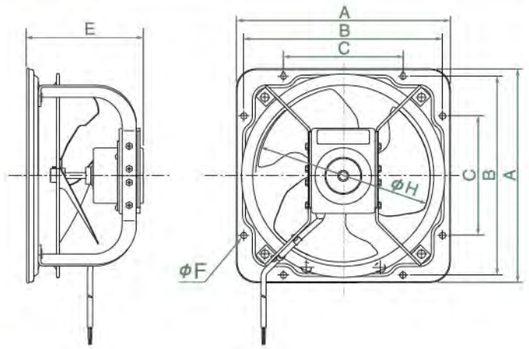

Model	A	B	C	D	E	F	G	H
25GSE	327	298	165	-	171	10	-	250
30GSE	378	349	210	-	200	10	-	300
35GSE	467	434	250	-	236	12	-	350

- Single phase
- Reversible by adjusting wiring and blade
- Bell mouth construction with distinctive wave-shaped blade
- Durable powder coating
- High performance motor with thermal cutoff
- Ambient temperature range from -10°C to +50°C
- Possible to install horizontally or vertically
- Optional Shutter available

KDK Company, Division of PES and Panasonic Ecology Systems Guangdong Co., Ltd. certify that the industrial series models shown herein are licensed to bear the AMCA Seal. The ratings shown are based on tests and procedures performed in accordance with AMCA Publication 211 and AMCA Publication 311 and comply with the requirements of the AMCA Certified Ratings Program.

Specification

Model	Voltage	Frequency	CFM/SONE AT STATIC Pressure (ps-inches of H_2O)							RPM	Watts*	Watts**
			inches of H_2O	0	0.05	0.075	0.1	0.125	0.25	0.375			
25GSE	220V	60Hz	CFM	788	742	715	686	647	-	-	1570	61	57
			Sones	4.9	4.7	4.5	4.5	4.6	-	-			
	240V	50Hz	CFM	701	657	633	600	565	187	-	1400	48	44
			Sones	3.8	3.6	3.6	3.5	3.6	8.6	-			
30GSE	220V	60Hz	CFM	1308	1247	1217	1184	1153	772	-	1460	129	119
			Sones	9.0	9.0	9.1	9.0	9.1	9.4	-			
	240V	50Hz	CFM	1177	1119	1090	1058	1026	561	243	1315	106	98
			Sones	5.5	5.5	5.6	5.6	5.8	11.1	12.0			
35GSE	220V	60Hz	CFM	1850	1788	1752	1712	1669	1456	600	1640	178	161
			Sones	11.9	11.6	12.0	12.4	13.6	14.6	13.4			
	240V	50Hz	CFM	1615	1548	1506	1458	1411	1147	390	1435	130	122
			Sones	8.6	8.2	8.2	8.0	8.0	12.6	13.4			

Performance certified is for installation type A: Free Inlet, Free Outlet. Speed (RPM) shown is nominal. Performance is based on actual speed of test. The sound ratings shown are loudness values in fan sones at 5 ft. (1.5m) in a hemispherical free field calculated per AMCA International Standard 301. Values shown are for installation type A: Free Inlet hemispherical sone levels.
* the Watts rating is only for AMCA test method and it is at the static pressure of 0 inch of H_2O.
** the Watts rating is only for IEC test method and the AMCA Certified Ratings Seal does not apply to IEC test method watts.

Industrial Type - **VENTILATING FAN**
(High Pressure Series)

40GSE

Dimension

Unit: mm

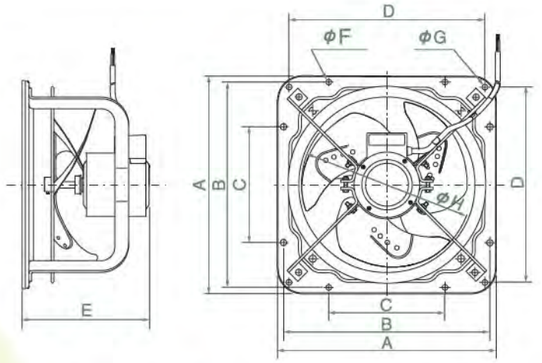

Model	A	B	C	D	E	F	G	H
40GSE	518	485	280	460	274	12	12	400

- Single phase
- Reversible by adjusting wiring and blade
- Bell mouth construction with distinctive wave-shaped blade
- Durable powder coating
- High performance motor with thermal cutoff
- Ambient temperature range from -10°C to +50°C
- Possible to install horizontally or vertically
- Optional Shutter available

KDK Company, Division of PES and Panasonic Ecology Systems Guangdong Co., Ltd. certify that the industrial series models shown herein are licensed to bear the AMCA Seal. The ratings shown are based on tests and procedures performed in accordance with AMCA Publication 211 and AMCA Publication 311 and comply with the requirements of the AMCA Certified Ratings Program.

Specification

Model	Voltage	Frequency	CFM/SONE AT STATIC Pressure (ps-inches of H_2O)							RPM	Watts*	Watts**
			inches of H_2O	0	0.05	0.075	0.1	0.125	0.25	0.375			
40GSE	220V	60Hz	CFM	2677	2581	2535	2488	2440	2170	2050	1550	294	270
			Sones	20.0	20.0	19.7	19.4	19.3	18.9	19.9			
	240V	50Hz	CFM	2135	2067	2035	2000	1965	1800	1480	1440	164	151
			Sones	9.0	8.5	8.7	8.7	8.7	13.0	14.2			

Performance certified is for installation type A: Free Inlet, Free Outlet. Speed (RPM) shown is nominal. Performance is based on actual speed of test. The sound ratings shown are loudness values in fan sones at 5 ft. (1.5m) in a hemispherical free field calculated per AMCA International Standard 301. Values shown are for installation type A: Free Inlet hemispherical sone levels.
* the Watts rating is only for AMCA test method and it is at the static pressure of 0 inch of H_2O.
** the Watts rating is only for IEC test method and the AMCA Certified Ratings Seal does not apply to IEC test method watts.

Industrial Type - **VENTILATING FAN**
(High Pressure Series)

45GSC / 50GSC / 60GSC

Dimension

Unit: mm

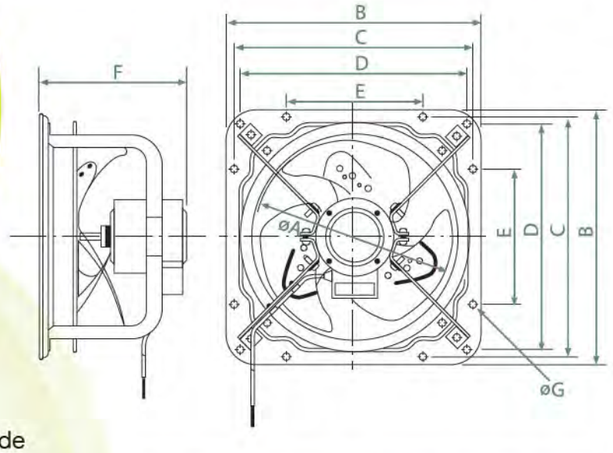

Model	A	B	C	D	E	F	G
45GSC	450	570	540	-	320	297	12
50GSC	500	659	620	560	355	315	15
60GSC	620	760	720	650	400	320	15

- Single phase
- Reversible by adjusting wiring and blade
- Bell mouth construction with distinctive wave-shaped blade
- Durable powder coating
- High performance motor with thermal cutoff
- Ambient temperature range from -10°C to +50°C
- Possible to install horizontally or vertically
- Optional Shutter available

KDK Company, Division of PES and Panasonic Ecology Systems Guangdong Co., Ltd. certify that the industrial series models shown herein are licensed to bear the AMCA Seal. The ratings shown are based on tests and procedures performed in accordance with AMCA Publication 211 and AMCA Publication 311 and comply with the requirements of the AMCA Certified Ratings Program.

Specification

Model no.	Voltage	Frequency	CFM/SONE AT STATIC Pressure (ps-inches of H_2O)					RPM	Watts*	Watts**
			inches of H_2O	0	0.2	0.3	0.4		FOR AMCA	FOR IEC
45GSC	220V	60Hz	CFM	3278	3131	3001	2795	1563	346	325
			Sones	10	10.4	10.6	10.8			
	240V	50Hz	CFM	2854	2648	2454	2030	1430	277	241
			Sones	7.8	7.7	7.8	9.4			
50GSC	220V	60Hz	CFM	3884	3443	3090	2501	1080	347	326
			Sones	10.9	11.3	11.5	11.8			
	240V	50Hz	CFM	3354	2854	2266	912	968	293	271
			Sones	11.7	13.8	14.5	15.4			
60GSC	220V	60Hz	CFM	5038	4349	3943	3560	1088	384	361
			Sones	10.1	9.8	9.5	10.1			
	240V	50Hz	CFM	4402	3855	3366	2972	980	289	263
			Sones	10.3	8.6	8.5	11.5			

Performance certified is for installation type A: Free Inlet, Free Outlet. The speed (RPM) and Watts rating shown are at the static pressure of 0 inch of H_2O. The sound ratings shown are loudness values in fan sones at 5 ft. (1.5m) in a hemispherical free field calculated per AMCA International Standard 301. Values shown are for installation type A: Free Inlet hemispherical sone levels.
* the Watts rating is only for AMCA test method and it is at the static pressure of 0 inch of H_2O.
** the Watts rating is only for IEC test method and the AMCA Certified Ratings Seal does not apply to IEC test method watts.

Industrial Type - **VENTILATING FAN**
(High Pressure Series)

45GTC / 50GTC / 60GTC

Dimension

Unit: mm

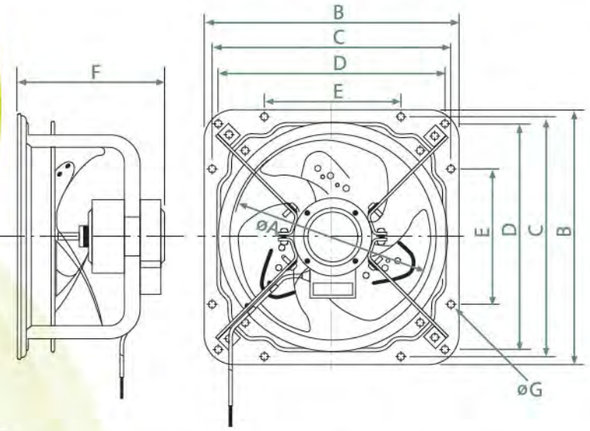

Model	A	B	C	D	E	F	G
45GTC	450	570	540	-	320	297	12
50GTC	500	659	620	560	355	304	15
60GTC	620	760	720	650	400	320	15

- Three Phase
- Reversible by adjusting wiring and blade
- Bell mouth construction with distinctive wave-shaped blade
- Durable powder coating
- High performance motor with thermal cutoff
- Ambient temperature range from -10°C to +50°C
- Possible to install horizontally or vertically
- Optional Shutter available

Performance Data [380V 50Hz/60Hz]

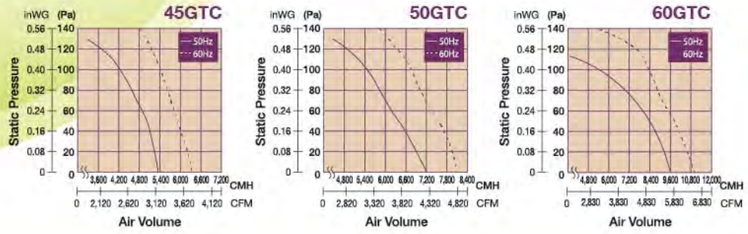

Specification

Model No.	Voltage [V]	Hz	Consumption [W]	RPM [min⁻¹]	Air Volume		Noise [dB(A)]	Weight [Kg]
					[CMH]	[CFM]		
45GTC	380	50	220	1,450	5,520	3,249	52	18.5
		60	330	1,690	6,420	3,779	56	
50GTC	380	50	320	1,400	6,960	4,097	54	28.5
		60	475	1,590	8,010	4,715	58	
60GTC	380	50	310	940	9,420	5,544	49	34
		60	450	1,070	10,920	6,427	53	

Note: The value in Specification table are representative characteristic value at 380V, 50/60Hz.
RPM data is for reference only. Values may vary subject to different conditions.

30KQT / 40KQT

- Used in factories, warehouses or other locations in where powerful ventilation is necessary
- Metal large blade assembly for abundant air volume
- Powerful, efficient and durable condenser motor
- Ambient temperature range from -10°C to +50°C

Dimension

Unit: mm

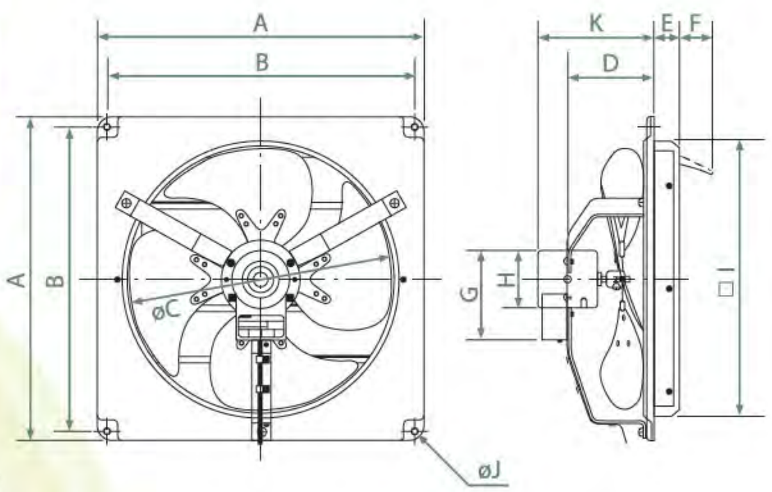

Model	A	B	C	D	E	F	G	H	I	J	K
30KQT	420	385	305	116	34	40	141	90	340	10	164
40KQT	510	480	410	133	40	52	141	90	434	10	181

Performance Data [220V 50Hz/60Hz]

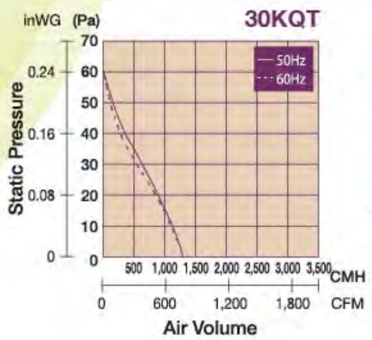

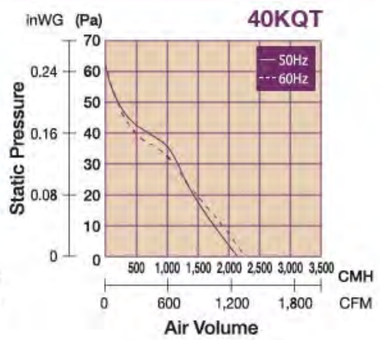

Specification

Model No.	Voltage [V]	Frequancy [Hz]	Consumption [W]	RPM [min-1]	Air Volume [CMH]	Air Volume [CFM]	Noise [dB(A)]	Weight [Kg]
30KQT	220	50	42	1,185	1,220	718	46	4.9
		60	51	1,255	1,270	747	47	
40KQT	220	50	61	1,175	2,060	1,212	49	6.4
		60	76	1,260	2,190	1,289	51	

Note: The value in Specification table are representative characteristic value at 220V, 50/60Hz.
RPM data is for reference only. Values may vary subject to different conditions.

Industrial Type - **VENTILATING FAN**
(Shutter Series)

50AEQ2

- Used in factories, warehouses or other locations in where powerful ventilation is necessary
- Metal large blade assembly for abundant air volume
- Powerful, efficient and durable condenser motor
- Ambient temperature range from -10°C to +50°C

Dimension

Unit: mm

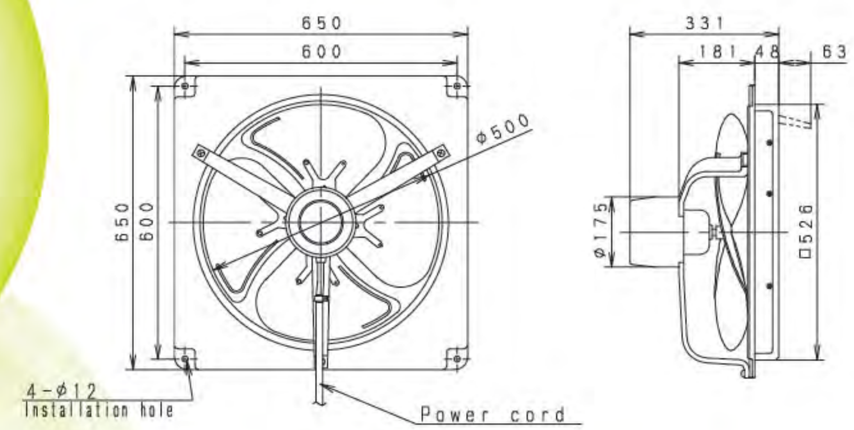

Performance Data [220V 50Hz/60Hz]

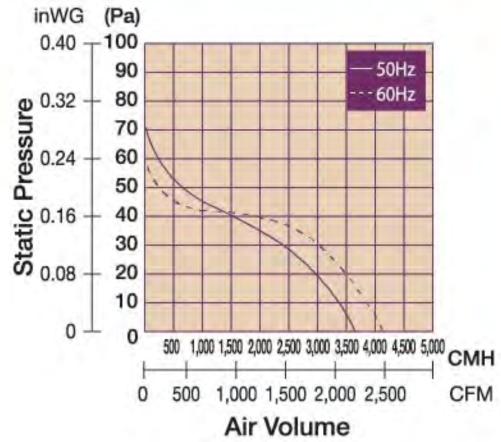

Specification

Model No.	Voltage [V]	Frequancy [Hz]	Consumption [W]	RPM [min-1]	Air Volume [CMH]	Air Volume [CFM]	Noise [dB(A)]	Weight [Kg]
50AEQ2	220	50	108	920	3,630	2,137	54	11.5
		60	130	1,050	4,200	2,472	58	

Note: The value in Specification table are representative characteristic value at 220V, 50/60Hz.
RPM data is for reference only. Values may vary subject to different conditions.

Wall Mount Type

Ventilating FAN

Introduction

These fans can be installed for exhausting air through a wall. They are equipped with exterior shutters, which will open when the fan is on and vice versa. A wide range of models are available with varying blade sizes or function, that can meet various requirements.
Filter type collects oil effectively and is ideal for the use in kitchens. Louver Type provides additional safety protection from finger reach while Reversible Type extends the flexibility of utilization by selection of exhaust or intake. Metallic Type is suitable for places where resin ventilating fans cannot be used. The newly launched Bathroom Series has a powerful exhaust capacity to remove moisture and smell in bathrooms and toilets.

General Features

Advanced Blade Design

New blade design applies advanced aerodynamic principle that minimizes any obstacles against the airflow.

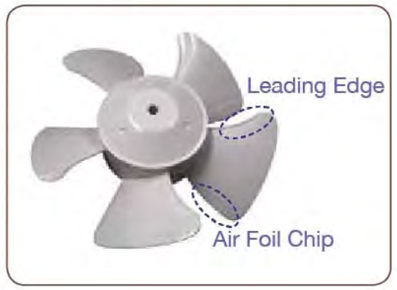

Leading Edge forms no obstacle to airflow that streamlines airflow from every direction

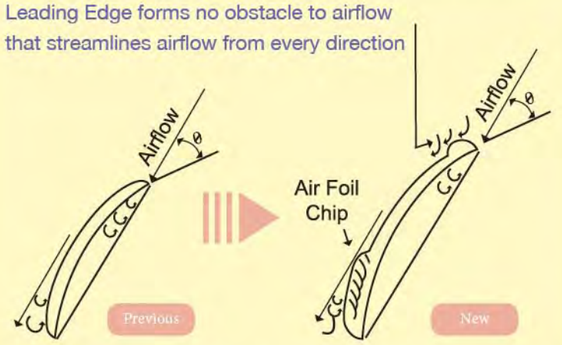

Air Foil Chip is to reduce turbulence at rear edge, and curvature of front edge is improved for smooth airflow that minimizes fan noise as well.

"HP motor" and "Bearing" are used

Bearing

HP (Half-Pitch) Motor & Bearing

Fans are designed with high performance condenser motors and long life bearings that double product durability from an average lifetime of 30,000 hours to 60,000 hours. They also enable energy saving by reducing power consumption by 13%.

Wall Mount Type - **VENTILATING FAN**
(Automatic Shutter Series)

15AAQ1

- Condenser motor with thermal cutoff
- Lubricated sintered bush for long life operation
- High performance propeller fan adopted
- Automatic shutter with plastic cushions
- Orifice equipped with oil cup

Dimension

Unit: mm

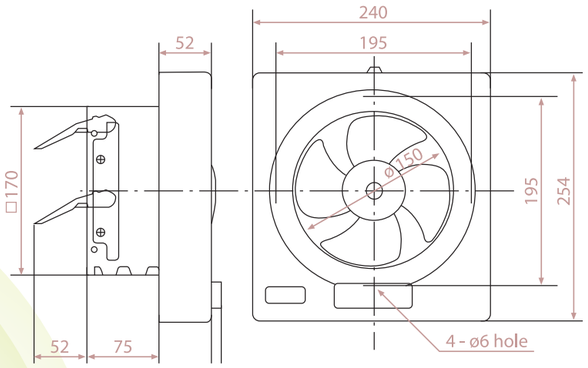

KDK Company, Division of PES and Panasonic Ecology Systems Guangdong Co., Ltd. certify that the wall mount series models shown herein are licensed to bear the AMCA Seal. The ratings shown are based on tests and procedures performed in accordance with AMCA Publication 211 and AMCA Publication 311 and comply with the requirements of the AMCA Certified Ratings Program.

Specification

Model	Voltage	Frequency	CFM/SONE AT STATIC Pressure (ps-inches of H_2O)				RPM	Watts*	Watts**
			inches of H_2O	0	0.025	0.05		FOR AMCA	FOR IEC
15AAQ1	220V	60Hz	CFM Sones	157 2.5	122 1.9	65 2.3	1533	20.6	19.0
	240V	50Hz	CFM Sones	154 1.7	120 1.4	63 2.1	1453	20.1	19.0

Performance certified is for installation type A: Free inlet, Free outlet. Performance ratings include the effects of a backdraft shutter. The speed (RPM) and Watts rating shown are at the static pressure of 0 inch of H_2O. Speed (RPM) shown in nominal. Performance is based on actual speed of test. The sound ratings shown are loudness values in fan sones at 5 ft. (1.5m) in a hemispherical free field calculated per AMCA International Standard 301. Values shown are for installation type A: Free inlet hemispherical sone levels.
*the Watts rating is only for AMCA test method and it is at the static pressure of 0 inch of H_2O.
**the Watts rating is only for IEC test method and the AMCA Certified Ratings Seal does not apply to IEC test method watts.

Wall Mount Type - **VENTILATING FAN**
(Filter Series)

25AUFA

- Recommend to use in kitchen
- Automatic Shutter
- Perforated aluminum filter with hydrophobic coating
- Large capacity oil cup
- Oil indicator on oil cup
- High exhaust air volume under actual usage condition (20Pa)

Dimension

Unit: mm

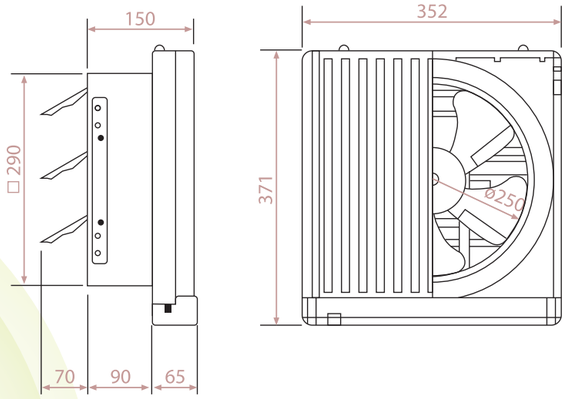

Performance Data [220V 50Hz/60Hz]

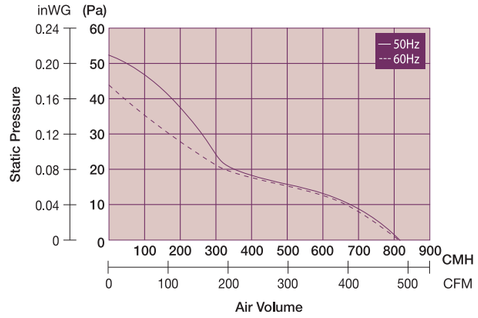

Specification

Model No.	Voltage [V]	Frequency [Hz]	Consumption [W]	RPM [min^{-1}]	Air Volume		Noise [dB(A)]	Weight [Kg]	Installation space [mm]
					[CMH]	[CFM]			
25AUFA	220	50	34	1,100	835	491	42	2.8	300 x 300
		60	34	1,060	820	483	42		

Note: The value in Specification table are representative characteristic value at 220V, 50/60Hz
RPM data is for reference only. Values may vary subject to different conditions.

Wall Mount Type - **VENTILATING FAN**
(Automatic Shutter Series)

20AUH / 25AUH / 30AUH 11

- HP condenser motor with thermal cutoff
- Well lubricated bearing for long life operation
- Propeller fan incorporated with advanced blade design (except 30AUH 11)
- Automatic shutter
- Single speed

Dimension

Unit: mm

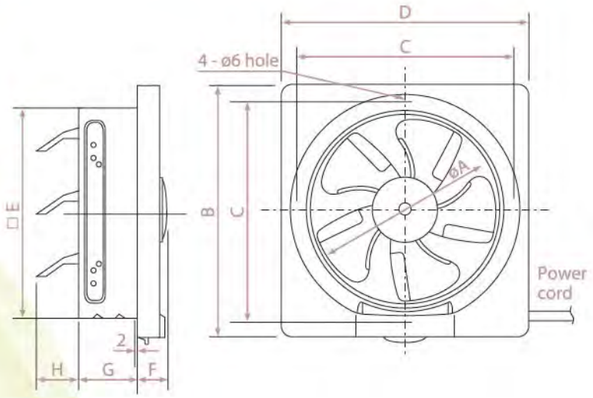

Model	A	B	C	D	E	F	G	H
20AUH	200	306	260	302	240	52	90	80
25AUH	250	356	310	352	290	38	90	63
30AUH 11	300	406	360	402	340	38	90	78

KDK Company, Division of PES and Panasonic Ecology Systems Guangdong Co., Ltd. certify that the wall mount series models shown herein are licensed to bear the AMCA Seal. The ratings shown are based on tests and procedures performed in accordance with AMCA Publication 211 and AMCA Publication 311 and comply with the requirements of the AMCA Certified Ratings Program.

Specification

Model	Voltage	Frequency	CFM/SONE AT STATIC Pressure (ps-inches of H_2O)				RPM	Watts*	Watts**
			inches of H_2O	0	0.025	0.05		FOR AMCA	FOR IEC
20AUH	220V	60Hz	CFM Sones	355 2.5	314 2.5	196 1.7	1410	32.4	28.5
25AUH	220V	60Hz	CFM Sones	514 1.8	426 1.5	290 1.8	1200	37.8	33.0
30AUH 11	220V	60Hz	CFM Sones	572 1.0	453 1.7	235 2.6	856	37.0	33.0

Performance certified is for installation type A: Free inlet, Free outlet. Performance ratings include the effects of a backdraft shutter. The speed (RPM) and Watts rating shown are at the static pressure of 0 inch of H_2O. The sound ratings shown are loudness values in fan sones at 5 ft. (1.5m) in a hemispherical free field calculated per AMCA International Standard 301. Values shown are for installation type A: Free inlet hemispherical sone levels.
*the Watts rating is only for AMCA test method and it is at the static pressure of 0 inch of H_2O.
**the Watts rating is only for IEC test method and the AMCA Certified Ratings Seal does not apply to IEC test method watts.

Wall Mount Type - **VENTILATING FAN**
(Automatic Shutter Series)

20AUHT / 25AUHT / 30AUHT

- HP condenser motor with thermal cutoff
- Well lubricated bearing for long life operation
- Propeller fan incorporated with advanced blade design (except 30AUHT)
- Automatic shutter
- Single speed

Dimension

Unit: mm

20AUHT

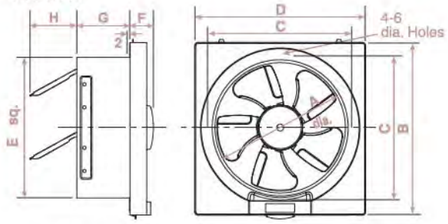

25AUHT / 30AUHT

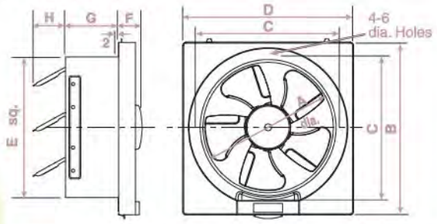

Model	A	B	C	D	E	F	G	H
20AUHT	200	306	260	302	240	52	90	80
25AUHT	250	356	310	352	290	38	90	63
30AUHT	300	406	360	402	340	38	90	78

KDK Company, Division of PES and Panasonic Ecology Systems (Thailand) Co., Ltd. certify that the wall mount series models shown herein are licensed to bear the AMCA Seal. The ratings shown are based on tests and procedures performed in accordance with AMCA Publication 211 and AMCA Publication 311 and comply with the requirements of the AMCA Certified Ratings Program.

Specification

Model	Voltage	Frequency	CFM/SONE AT STATIC Pressure (ps-inches of H_2O)					RPM	Watts*	Watts**
			inches of H_2O	0	0.02	0.04	0.06		FOR AMCA	FOR IEC
20AUHT	220V	60Hz	CFM Sones	356 2.3	315 2.4	271 1.8	227 2.8	1343	24.5	22
	240V	50Hz	CFM Sones	338 2.1	294 2.4	253 2	171 3.5	1234	23.5	21.5
25AUHT	220V	60Hz	CFM Sones	515 2.5	421 2.3	330 1.9	227 3	1113	34.3	31
	240V	50Hz	CFM Sones	527 5.8	465 5.6	400 5.2	347 4.8	1143	35.2	32
30AUHT	220V	60Hz	CFM Sones	586 2.2	486 2.2	335 4.1	174 2.4	874	40.4	38
	240V	50Hz	CFM Sones	624 3.7	565 3.6	491 3.6	312 4.1	935	41.5	39

Performance certified is for installation type A: Free inlet, Free outlet. Performance ratings include the effects of a backdraft shutter. The speed (RPM) and Watts rating shown are at the static pressure of 0 inch of H_2O. The sound ratings shown are loudness values in fan sones at 5 ft. (1.5m) in a hemispherical free field calculated per AMCA International Standard 301. Values shown are for installation type A: Free inlet hemispherical sone levels.
* the Watts rating is only for AMCA test method and it is at the static pressure of 0 inch of H_2O.
** the Watts rating is only for IEC test method and the AMCA Certified Ratings Seal does not apply to IEC test method watts.

Wall Mount Type - **VENTILATING FAN**
(Automatic Shutter Louver Series)

20ALH / 25ALH / 30ALF 11

- HP condenser motor with thermal cutoff
- Well lubricated bearing for long life operation
- Propeller fan incorporated with advanced blade design (except 30ALF 11)
- Automatic shutter
- Single speed

Dimension

Unit: mm

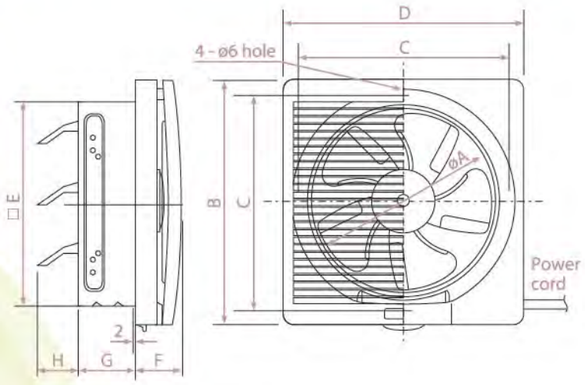

Model	A	B	C	D	E	F	G	H
20ALH	200	306	260	302	240	68	90	80
25ALH	250	356	310	352	290	63	90	63
30ALF 11	300	406	360	402	340	63	90	78

KDK Company, Division of PES and Panasonic Ecology Systems Guangdong Co., Ltd. certify that the wall mount series models shown herein are licensed to bear the AMCA Seal. The ratings shown are based on tests and procedures performed in accordance with AMCA Publication 211 and AMCA Publication 311 and comply with the requirements of the AMCA Certified Ratings Program.

Specification

Model	Voltage	Frequency	CFM/SONE AT STATIC Pressure (ps-inches of H_2O)				RPM	Watts*	Watts**
			inches of H_2O	0	0.025	0.05		FOR AMCA	FOR IEC
20ALH	220V	60Hz	CFM Sones	328 3.5	280 3.2	170 3.4	1385	32.8	28.5
25ALH	220V	60Hz	CFM Sones	420 2.7	372 2.7	232 4.6	1097	37.5	33.0
30ALF 11	220V	60Hz	CFM Sones	447 2.0	288 2.7	154 2.2	746	37.1	33.0

Performance certified is for installation type A: Free inlet, Free outlet. Performance ratings include the effects of an inlet grill and backdraft shutter. The speed (RPM) and Watts rating shown are at the static pressure of 0 inch of H_2O. The sound ratings shown are loudness values in fan sones at 5 ft. (1.5m) in a hemispherical free field calculated per AMCA International Standard 301. Values shown are for installation type A: Free inlet hemispherical sone levels.
*the Watts rating is only for AMCA test method and it is at the static pressure of 0 inch of H_2O.
**the Watts rating is only for IEC test method and the AMCA Certified Ratings Seal does not apply to IEC test method watts.

Wall Mount Type - **VENTILATING FAN**
(Automatic Shutter Louver Series)

20ALHT / 25ALHT / 30ALFT

- HP condenser motor with thermal cutoff
- Well lubricated bearing for long life operation
- Propeller fan incorporated with advanced blade design (except 30ALFT)
- Automatic shutter
- Single speed

Dimension

Unit: mm

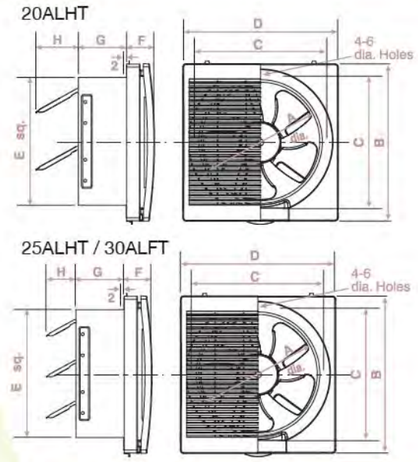

Model	A	B	C	D	E	F	G	H
20ALHT	200	306	260	302	240	68	90	80
25ALHT	250	356	310	352	290	63	90	63
30ALFT	300	406	360	402	340	63	90	78

KDK Company, Division of PES and Panasonic Ecology Systems (Thailand) Co., Ltd. certify that the wall mount series models shown herein are licensed to bear the AMCA Seal. The ratings shown are based on tests and procedures performed in accordance with AMCA Publication 211 and AMCA Publication 311 and comply with the requirements of the AMCA Certified Ratings Program.

Specification

Model	Voltage	Frequency	CFM/SONE AT STATIC Pressure (ps-inches of H_2O)					RPM	Watts*	Watts**
			inches of H_2O	0	0.02	0.04	0.06		FOR AMCA	FOR IEC
20ALHT	220V	60Hz	CFM Sones	327 2.8	294 2.7	256 4.3	162 5.3	1277	24.2	22
	240V	50Hz	CFM Sones	300 2.6	274 2.5	234 3.8	141 3.8	1228	23.5	21.5
25ALHT	220V	60Hz	CFM Sones	465 3.5	409 3.2	350 3	250 5.4	1116	40	36
	240V	50Hz	CFM Sones	468 5.5	418 5.9	371 5	327 5.2	1152	35.2	32
30ALFT	220V	60Hz	CFM Sones	503 2.6	374 3	230 3.1	119 2.5	833	42	38
	240V	50Hz	CFM Sones	571 3.8	494 3.7	406 5.1	247 3.8	921	44.3	40

Performance certified is for installation type A: Free inlet, Free outlet. Performance ratings include the effects of an inlet grill and backdraft shutter. The speed (RPM) and Watts rating shown are at the static pressure of 0 inch of H_2O. The sound ratings shown are loudness values in fan sones at 5 ft. (1.5m) in a hemispherical free field calculated per AMCA International Standard 301. Values shown are for installation type A: Free inlet hemispherical sone levels.
* the Watts rating is only for AMCA test method and it is at the static pressure of 0 inch of H_2O.
** the Watts rating is only for IEC test method and the AMCA Certified Ratings Seal does not apply to IEC test method watts.

Wall Mount Type - **VENTILATING FAN**
(Reversible Series)

20RGF / 25RGF / 30RGF

- Reversible
- On-off and reverse operated by pull cord switch
- HP condenser motor with thermal cut-off
- Well lubricated bearing for long life operation
- Propeller fan incorporated with advanced blade design (except 30RGF)
- Shutter operated by pull cord

Dimension

Unit: mm

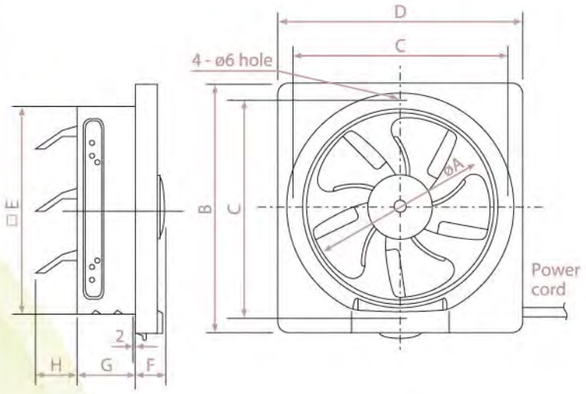

Model	A	B	C	D	E	F	G	H
20RGF	200	306	260	302	240	52	90	80
25RGF	250	356	310	352	290	38	90	63
30RGF	300	406	360	402	340	38	90	78

Specification

Model No.		Voltage [V]	Frequency [Hz]	Consumption [W]	RPM [min-1]	Air Volume [CMH]	Air Volume [CFM]	Noise [dB(A)]	Weight [kg]	Installation space [mm]
20RGF	Exhaust	220	50	20	1,290	580	341	36	2.2	250 x 250
			60	25	1,440	650	383	39		
	Intake		50	16	1,100	405	238	46		
			60	17	1,170	355	209	48		
25RGF	Exhaust	220	50	29	1,120	945	556	38	2.4	300 x 300
			60	34	1,145	950	559	39		
	Intake		50	20	900	640	377	45		
			60	24	995	645	380	44		
30RGF	Exhaust	220	50	31	990	1,165	686	39	2.8	350 x 350
			60	33	995	1,150	677	38		
	Intake		50	24	905	800	471	43		
			60	24	810	745	428	42		

Note: The value in Specification table are representative characteristic value at 220V, 50/60Hz
RPM data is for reference only. Values may vary subject to different conditions.

Wall Mount Type - **VENTILATING FAN**
(Reversible Series)

20RGFT / 25RGFT / 30RGFT

- Reversible
- On-off and reverse operated by pull cord switch
- HP condenser motor with thermal cut-off
- Well lubricated bearing for long life operation
- Propeller fan incorporated with advanced blade design (except 30RGFT)
- Shutter operated by pull cord

Dimension

Unit: mm

20AUHT

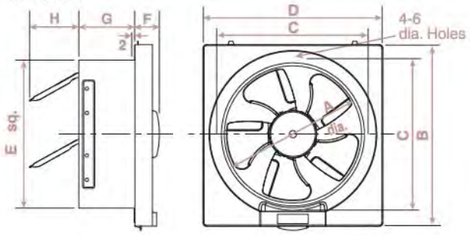

25AUHT / 30AUHT

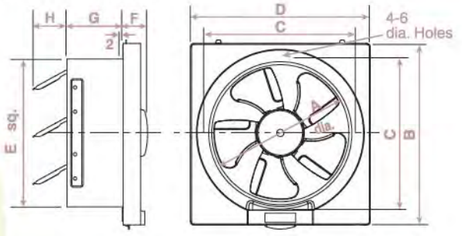

Model	A	B	C	D	E	F	G	H
20RGFT	200	306	260	302	240	52	90	80
25RGFT	250	356	310	352	290	38	90	63
30RGFT	300	406	360	402	340	38	90	78

Specification

Model No.		Voltage [V]	Frequency [Hz]	Consumption [W]	RPM [min-1]	Air Volume [CMH]	Air Volume [CFM]	Noise [dB(A)]	Weight [kg]	Installation space [mm]
20RGFT	Exhaust	220	50	20	1,260	580	341	36	2.2	250 x 250
			60	24	1,410	630	371	39		
	Intake		50	15	1,150	405	238	46		
			60	17	1,140	355	209	46		
25RGFT	Exhaust	220	50	27	1,090	945	556	38	2.4	300 x 300
			60	31	1,110	950	559	39		
	Intake		50	21	1,010	600	353	45		
			60	23	970	560	330	44		
30RGFT	Exhaust	220	50	31	885	1,165	686	39	2.8	350 x 350
			60	38	800	1,000	589	38		
	Intake		50	24	840	700	412	43		
			60	26	810	680	400	42		

Note: The value in Specification table are representative characteristic value at 220V, 50/60Hz
RPM data is for reference only. Values may vary subject to different conditions.

Wall Mount Type - **VENTILATING FAN**
(Reversible Louver Series)

20RLF / 25RLF / 30RLE

- Reversible
- On-off and reverse operated by pull cord switch
- HP condenser motor with thermal cutoff
- Well lubricated bearing for long life operation
- Propeller fan incorporated with advanced blade design (except 30RLE)
- Shutter operated by pull cord

Dimension

Unit: mm

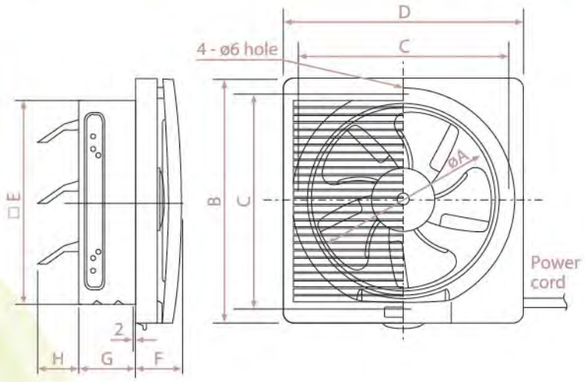

Model	A	B	C	D	E	F	G	H
20RLF	200	306	260	302	240	68	90	80
25RLF	250	356	310	352	290	63	90	63
30RLE	300	406	360	402	340	63	90	78

Specification

Model No.		Voltage [V]	Frequency [Hz]	Consumption [W]	RPM [min-1]	Air Volume [CMH]	Air Volume [CFM]	Noise [dB(A)]	Weight [kg]	Installation space [mm]
20RLF	Exhaust	220	50	20	1,275	546	321	39	2.4	250 x 250
			60	25	1,290	600	353	43		
	Intake		50	17	1,225	385	227	46		
			60	17	1,145	340	200	49		
25RLF	Exhaust	220	50	29	1,060	876	516	41	2.7	300 x 300
			60	34	1,060	835	491	41		
	Intake		50	20	1,020	570	335	45		
			60	24	970	573	338	43		
30RLE	Exhaust	220	50	31	876	990	583	44	3.1	350 x 350
			60	33	885	945	556	43		
	Intake		50	24	850	730	430	43		
			60	24	776	690	406	44		

Note: The value in Specification table are representative characteristic value at 220V, 50/60Hz
RPM data is for reference only. Values may vary subject to different conditions.

Wall Mount Type - **VENTILATING FAN**
(Reversible Louver Series)

20RLFT / 25RLFT / 30RLET

- Reversible
- On-off and reverse operated by pull cord switch
- HP condenser motor with thermal cutoff
- Well lubricated bearing for long life operation
- Propeller fan incorporated with advanced blade design (except 30RLET)
- Shutter operated by pull cord

Dimension

Unit: mm

20RLFT

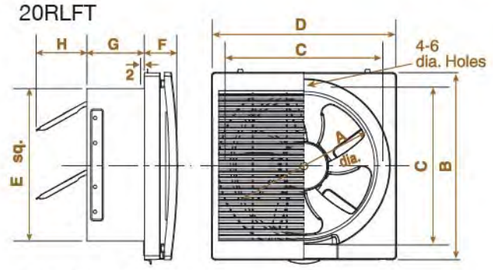

25RLFT / 30RLET

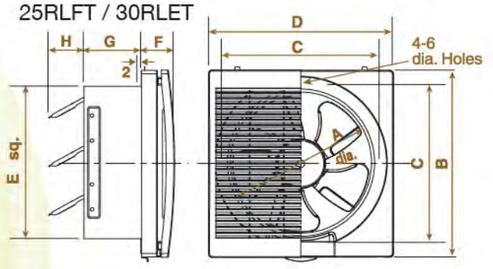

Model	A	B	C	D	E	F	G	H
20RLFT	200	306	260	302	240	68	90	80
25RLFT	250	356	310	352	290	63	90	63
30RLET	300	406	360	402	340	63	90	78

Specification

Model No.		Voltage [V]	Frequency [Hz]	Consumption [W]	RPM [min-1]	Air Volume [CMH]	Air Volume [CFM]	Noise [dB(A)]	Weight [kg]	Installation space [mm]
20RLFT	Exhaust	220	50	20	1,240	548	321	39	2.4	250 x 250
			60	24	1,290	570	335	43		
	Intake		50	15	1,190	370	218	46		
			60	17	1,180	340	200	46		
25RLFT	Exhaust	220	50	29	1,100	840	494	43	2.7	300 x 300
			60	33	1,100	835	491	43		
	Intake		50	21	1,035	580	341	43		
			60	23.5	1,035	560	330	44.5		
30RLET	Exhaust	220	50	31	890	990	583	44	3.1	350 x 350
			60	38	880	945	558	43		
	Intake		50	25	770	600	353	43		
			60	26	770	600	353	44		

Note: The value in Specification table are representative characteristic value at 220V, 50/60Hz
RPM data is for reference only. Values may vary subject to different conditions.

Wall Mount Type - **VENTILATING FAN**
(Metallic Series)

20ASB / 20ASB 05/ 25ASB / 25ASB 05/ 30ASB / 30ASB 05

- Condenser motor with thermal cutoff
- Well lubricated bearing for long life operation
- High performance propeller fan adopted
- Automatic shutter
- Powder painted metallic orifice, blade and oil cup
- Detachable oil cup

Dimension

Unit: mm

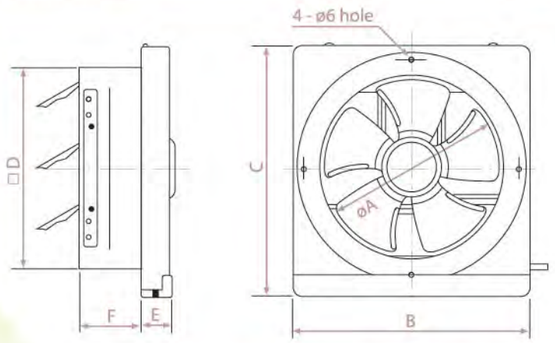

Model	A	B	C	D	E	F
20ASB/20ASB 05	200	300	312	240	50	90
25ASB/25ASB 05	250	350	362	290	45	90
30ASB/30ASB 05	300	400	412	340	45	90

KDK Company, Division of PES and Panasonic Ecology Systems Guangdong Co., Ltd. certify that the wall mount series models shown herein are licensed to bear the AMCA Seal. The ratings shown are based on tests and procedures performed in accordance with AMCA Publication 211 and AMCA Publication 311 and comply with the requirements of the AMCA Certified Ratings Program.

Specification

Model	Voltage	Frequency	CFM/SONE AT STATIC Pressure (ps-inches of H_2O)				RPM	Watts*	Watts**
			inches of H_2O	0	0.025	0.05		FOR AMCA	FOR IEC
20ASB	220V	60Hz	CFM	330	259	183	1358	25.5	21.5
			Sones	1.7	1.9	3.9			
	240V	50Hz	CFM	296	198	151	1252	22.4	19.5
			Sones	1.5	1.7	3.2			
20ASB 05	240V	50Hz	CFM	296	198	151	1252	22.4	19.5
			Sones	1.5	1.7	3.2			
25ASB	220V	60Hz	CFM	522	414	240	1277	35.5	30.5
			Sones	1.9	1.6	2.2			
	240V	50Hz	CFM	486	434	314	1194	35.1	29.5
			Sones	2.0	2.0	2.4			
25ASB 05	240V	50Hz	CFM	486	434	314	1194	35.1	29.5
			Sones	2.0	2.0	2.4			
30ASB	220V	60Hz	CFM	637	400	85	1088	39.8	34.5
			Sones	2.0	2.7	2.2			
	240V	50Hz	CFM	706	620	498	1175	38.1	34
			Sones	2.9	2.3	2.2			
30ASB 05	240V	50Hz	CFM	706	620	498	1175	38.1	34
			Sones	2.9	2.3	2.2			

Performance certified is for installation type A: Free inlet, Free outlet. Performance ratings include the effects of a backdraft shutter. The speed (RPM) and Watts rating shown are at the static pressure of 0 inch of H_2O. The sound ratings shown are loudness values in fan sones at 5 ft. (1.5m) in a hemispherical free field calculated per AMCA International Standard 301. Values shown are for installation type A: Free inlet hemispherical sone levels.
*the Watts rating is only for AMCA test method and it is at the static pressure of 0 inch of H_2O.
**the Watts rating is only for IEC test method and the AMCA Certified Ratings Seal does not apply to IEC test method watts.

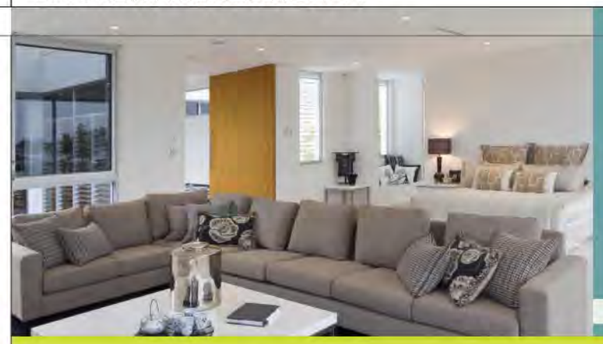

Window Mount Type
Ventilating FAN

These fans are mounted on and exhaust air through a glass windowpane. One person can do installation from interior of the room. This saves both the cost of installation and that of making a wall opening. Various types are available for different usages. Deluxe type can operate in rain and strong wind velocity up to 10m/s, without any backflow. Cord-operated Shutter Type can be easily installed in any glass windowpane. Electric Shutter Type and Automatic Shutter Type maintain air-tightness as fan is turned off.

Features for Electric Shutter Series 15WHCT / 20WHCT

1 Rain proof and wind resistible

Hood structure for prevention of rain water ingression

High static pressure blade can prevent ingression of rain & wind during operation

Newly design of shutter can keep out entry of rain water effectively

Bent End Structure of the shutter can block the back flow of outside wind

2 Easy Installation

Example: 15WHCT

Orifice is not necessary to detach for installation. Simply fix the fan on glass plate by screws at front

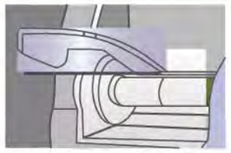

Mounting Bracket
Unique design of mounting bracket can fix the fan on glass plate with simple process

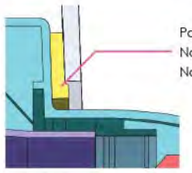

Packing
No Gasket
No Silicon Seal

Attached packing tightly closes to the glass plate that gets rid of water leakage to indoor

Previous Setting Method

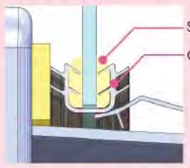

Silicon Seal
Gasket

Both gasket & silicon seal are not

3 High Adaptability

New mounting design allows the fan to be fixed on glass plate of thickness from 3mm up to 25mm

Applicable Glass Thickness
3mm ~ 25mm

Window Mount Type - **VENTILATING FAN**
(High Pressure Deluxe Series)

15WJA

Dimension

Unit: mm

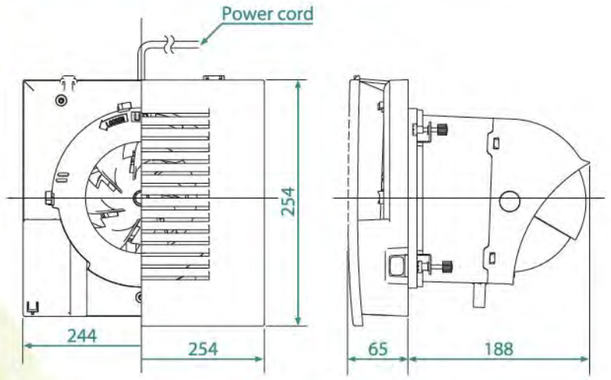

- Rain proof and wind resistance
- Condenser motor with thermal cutoff
- Well lubricated bearing for long life operation
- Highly efficient axial fan adopted
- Electrically operated shutter with dome shaped hood
- Integral rocker switch for speed selectable

Performance Data [220V 50Hz/60Hz]

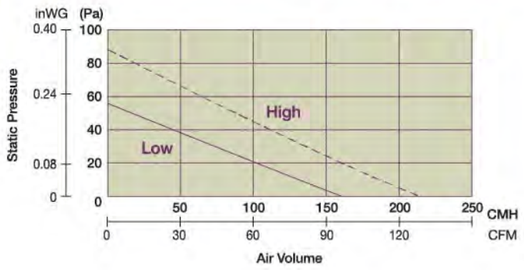

Specification

Model No.	Voltage [V]	Frequency [Hz]		Consumption [W]	RPM [min⁻¹]	Air Volume [CMH]	Air Volume [CFM]	Noise [dB(A)]	Weight [Kg]	Installation Size [mm]
15WJA	220	50	Hi	22	1,878	205	121	46	2.4	ø 186 - ø 190
			Lo	19	1,325	145	85	36		
		60	Hi	27	2,012	220	129	48		
			Lo	20	1,394	153	90	38		

Note: The value in Specification table are representative characteristic value at 220V, 50/60Hz
RPM data is for reference only. Values may vary subject to different conditions.

Window Mount Type - **VENTILATING FAN**
(Electric Shutter Series)

15WHCT / 20WHCT

Dimension

Unit: mm

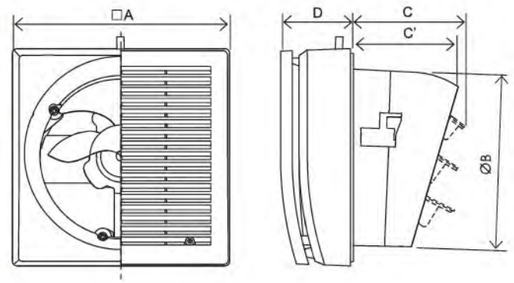

Model	A	B	C	C'	D
15WHCT	224	182	117	111	72
20WHCT	288	243	120	117	74

- Electrically Operated Shutter
- Advance design hood structure to prevent from rain and wind.
- Suitable for thickness of 3mm to 25mm
- Simple and Easy installation, no need of any silicon seal or gasket

KDK Company, Division of PES and Panasonic Ecology Systems (Thailand) Co., Ltd. certify that the window mount series models shown herein are licensed to bear the AMCA Seal. The ratings shown are based on tests and procedures performed in accordance with AMCA Publication 211 and AMCA Publication 311 and comply with the requirements of the AMCA Certified Ratings Program.

Specification

Model	Voltage	Frequency	CFM/SONE AT STATIC Pressure (ps-inches of H_2O)					RPM	Watts*	Watts**
			inches of H_2O	0	0.05	0.1	0.15		FOR AMCA	FOR IEC
15WHCT	220V	60Hz	CFM	127	94	63	31	2440	14.6	13
			Sones	3.0	3.6	3.5	3.9			
	240V	50Hz	CFM	127	95	68	50	2537	16	15
			Sones	2.3	2.7	3.5	2.8			
20WHCT	220V	60Hz	CFM	250	188	127	78	1517	24.4	22
			Sones	3	3.9	4.5	4.2			
	240V	50Hz	CFM	230	147	103	53	1333	23.4	22
			Sones	2.8	3.8	3.4	4			

Performance certified is for installation type A: Free Inlet, Free Outlet. Performance ratings include the effects of inlet grille and shutter. The speed (RPM) and Watts rating shown are at the static pressure of 0 inch of H_2O. The sound ratings shown are loudness values in fan sones at 5 ft. (1.5m) in a hemispherical free field calculated per AMCA International Standard 301. Values shown are for installation type A: Free Inlet hemispherical sone levels.
* the Watts rating is only for AMCA test method and it is at the static pressure of 0 inch of H_2O.
** the Watts rating is only for IEC test method and the AMCA Certified Ratings Seal does not apply to IEC test method watts.

Window Mount Type - **VENTILATING FAN**
(Automatic Shutter Series)

15WAA / 15WAAMN / 20WAA / 20WAAMN

- Automatic shutter
- High Performance Condenser motor with thermo cut-off
- Well lubricated bearing for long life operation
- Propeller fan incorporated with advance blade design.
- Removable blade for easy maintenance

Dimension

Unit: mm

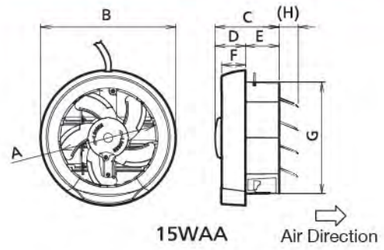

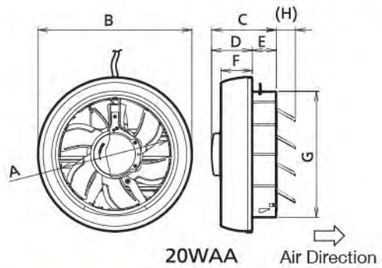

Model	A	B	C	D	E	F	G	H (Max)
15WAA / 15WAAMN	150	212	100	47	53	38	175	(30)
20WAA / 20WAAMN	206	290	122	76	46	59	237	(36)

KDK Company, Division of PES and Panasonic Ecology Systems (Thailand) Co., Ltd. certify that the window mount series models shown herein are licensed to bear the AMCA Seal. The ratings shown are based on tests and procedures performed in accordance with AMCA Publication 211 and AMCA Publication 311 and comply with the requirements of the AMCA Certified Ratings Program.

Specification

Model	Voltage	Frequency	CFM/SONE AT STATIC Pressure (ps-inches of H2O)					RPM	Watts*	Watts**
			Inches of H_2O	0	0.02	0.04	0.06		FOR AMCA	FOR IEC
15WAA 15WAAMN	220V	60Hz	CFM	124	109	91	79	2021	19.6	18
			Sones	3.6	4.5	4.1	4			
	240V	50Hz	CFM	124	109	93	78	2062	18.2	16
			Sones	3.5	4.5	4.1	3.8			
20WAA 20WAAMN	220V	60Hz	CFM	206	147	124	94	1385	18.4	17
			Sones	3.7	3.8	3.5	3.3			
	240V	50Hz	CFM	165	153	141	131	1375	18.6	17.5
			Sones	3.4	3.3	3.4	3.4			

Performance certified is for installation type A: Free Inlet, Free Outlet. Performance ratings include the effects of a shutter. The speed (RPM) and Watts rating shown are at the static pressure of 0 inch of H_2O. The sound ratings shown are loudness values in fan sones at 5 ft. (1.5m) in a hemispherical free field calculated per AMCA International Standard 301. Values shown are for installation type A: Free Inlet hemispherical sone levels.
* the Watts rating is only for AMCA test method and it is at the static pressure of 0 inch of H_2O.
** the Watts rating is only for IEC test method and the AMCA Certified Ratings Seal does not apply to IEC test method watts.

Window Mount Type - **VENTILATING FAN**
(Cord-operated Shutter Series)

15WUD / 20WUD

- HP condenser motor with thermal cutoff
- Well lubricated bearing for long life operation
- Propeller fan incorporated with advanced blade design
- Shutter operated by pull cord
- Metallic shutter axis

Dimension

Unit: mm

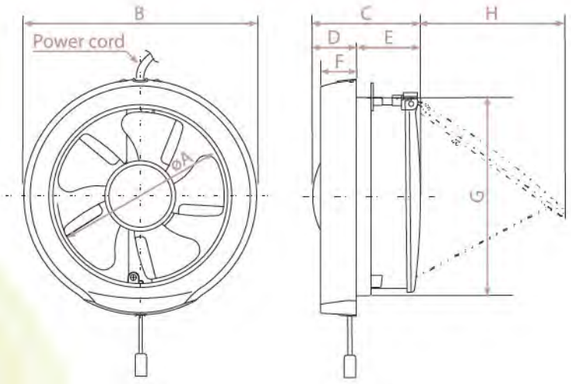

Model	A	B	C	D	E	F	G	H
15WUD	150	210	97	43	54	37	177	149
20WUD	200	271	98	36	62	36	237	201

KDK Company, Division of PES and Panasonic Ecology Systems (Thailand) Co., Ltd. certify that the window mount series models shown herein are licensed to bear the AMCA Seal. The ratings shown are based on tests and procedures performed in accordance with AMCA Publication 211 and AMCA Publication 311 and comply with the requirements of the AMCA Certified Ratings Program.

Specification

Model	Voltage	Frequency	CFM/SONE AT STATIC Pressure (ps-inches of H2O)					RPM	Watts*	Watts**
			inches of H_2O	0	0.01	0.02	0.03		FOR AMCA	FOR IEC
15WUD	220V	60Hz	CFM	105	94	79	66	1425	9.7	8.9
			Sones	0.9	0.9	2.2	2.4			
	240V	50Hz	CFM	124	115	104	94	1722	10.3	9.5
			Sones	1.4	1.6	1.8	3.7			
			inches of H_2O	0	0.02	0.03	0.04			
20WUD	220V	60Hz	CFM	188	129	112	88	980	19.2	17.9
			Sones	0.8	1.2	1.8	1.4			
	240V	50Hz	CFM	221	168	141	118	1096	18.5	17.2
			Sones	1.8	1.6	2.2	2.0			

Performance certified is for installation type A: Free Inlet, Free Outlet. Performance ratings include the effects of a shutter. The speed (RPM) and Watts rating shown are at the static pressure of 0 inch of H_2O. The sound ratings shown are loudness values in fan sones at 5 ft. (1.5m) in a hemispherical free field calculated per AMCA International Standard 301. Values shown are for installation type A: Free Inlet hemispherical sone levels.
* the Watts rating is only for AMCA test method and it is at the static pressure of 0 inch of H_2O.
** the Watts rating is only for IEC test method and the AMCA Certified Ratings Seal does not apply to IEC test method watts.

Specification

Ceiling Mount Ventilating Fan Model Comparison

Model no.	Voltage	Frequency	Speed	CFM/SONE AT STATIC Pressure (ps-inches of H_2O)										RPM	Watts*	Watts**
				inches of H_2O	0	0.1	0.125	0.25	0.375	0.5	0.625	0.75	0.875			
17CUG	220V	60Hz	-	CFM	41	28	25	-	-	-	-	-	-	810	11	10
				Sones	0.3	0.5	0.6	-	-	-	-	-	-			
	240V	50Hz	-	CFM	50	43	40	-	-	-	-	-	-	780	12	10.5
				Sones	0.3	0.4	0.6	-	-	-	-	-	-			
24CUG	220V	60Hz	-	CFM	83	73	68	44	-	-	-	-	-	610	16	15.5
				Sones	0.5	0.6	0.6	1.4	-	-	-	-	-			
	240V	50Hz	-	CFM	88	77	75	51	-	-	-	-	-	680	15.1	14
				Sones	0.7	0.8	0.9	1.6	-	-	-	-	-			
24CDG	220V	60Hz	-	CFM	101	90	88	64	-	-	-	-	-	750	18.2	16.5
				Sones	0.7	0.8	0.9	1.5	-	-	-	-	-			
	240V	50Hz	-	CFM	105	91	86	64	-	-	-	-	-	780	18.6	17.5
				Sones	0.8	0.9	1.0	1.7	-	-	-	-	-			
24CHG	220V	60Hz	-	CFM	109	99	96	75	47	-	-	-	-	860	23.6	22
				Sones	1.0	1.2	1.2	1.5	2.4	-	-	-	-			
	240V	50Hz	-	CFM	116	100	94	72	33	-	-	-	-	890	23.5	22
				Sones	1.2	1.3	1.4	1.6	2.1	-	-	-	-			
27CHH	220V	60Hz	Hi	CFM	182	162	156	118	78	37	-	-	-	570	33	33
				Sones	1.1	1.2	1.3	1.7	2.2	2.5	-	-	-			
	240V	50Hz	Hi	CFM	198	179	172	126	78	18	-	-	-	609	37	34
				Sones	1.4	1.5	1.6	1.8	2.3	2.5	-	-	-			
32CDH	220V	60Hz	Hi	CFM	226	202	196	163	127	91	53	-	-	580	48	48
				Sones	1.2	1.3	1.4	1.7	2.2	2.7	3.3	-	-			
	240V	50Hz	Hi	CFM	257	236	230	192	147	99	53	-	-	675	56	50
				Sones	1.6	1.7	1.8	1.9	2.5	3.0	3.6	-	-			
38CDG	220V	60Hz	Hi	CFM	344	323	317	290	261	230	197	163	126	628	98	98
				Sones	3.1	3.2	3.2	3.3	3.6	4.1	4.5	5.7	5.7			
38CDG 05 38CDG	240V	50Hz	Hi	CFM	387	367	362	336	305	259	212	165	108	737	118	107
				Sones	4.0	4.1	4.2	4.3	4.4	4.7	5.3	5.7	6.2			
24JRB	220V	60Hz	Hi	CFM	88	88	88	88	63	34	5	-	-	853	10	8
				Sones	0.7	1.0	1.0	1.3	1.7	1.8	3.1	-	-			
	240V	50Hz	Hi	CFM	88	88	88	88	63	34	5	-	-			
				Sones	0.7	1.0	1.0	1.3	1.7	1.8	3.1	-	-			
24JAB	220V	60Hz	Hi	CFM	88	88	88	88	63	34	5	-	-	839	10	8
				Sones	0.6	0.9	1.0	1.4	1.6	1.9	3.2	-	-			
	240V	50Hz	Hi	CFM	88	88	88	88	63	34	5	-	-			
				Sones	0.6	0.9	1.0	1.4	1.6	1.9	3.2	-	-			
24CMUA	220V	60Hz	-	CFM	55	40	37	20	-	-	-	-	-	495	13	12
				Sones	0.3	0.7	0.8	1.6	-	-	-	-	-			
	240V	50Hz	-	CFM	55	44	41	24	-	-	-	-	-	562	14	13
				Sones	0.3	0.8	1.0	1.4	-	-	-	-	-			
24CMHA	220V	60Hz	-	CFM	94	85	83	72	54	-	-	-	-	681	25	23
				Sones	1.0	1.4	1.5	1.9	2.3	-	-	-	-			
	240V	50Hz	-	CFM	108	98	95	77	44	-	-	-	-	753	27	25
				Sones	1.4	1.8	1.9	2.1	2.2	-	-	-	-			
27CMHA	220V	60Hz	-	CFM	208	184	178	144	108	79	-	-	-	615	46	43
				Sones	1.6	1.7	1.7	2.3	3.2	3.5	-	-	-			
	240V	50Hz	-	CFM	219	194	188	150	110	70	-	-	-	669	46	43
				Sones	1.9	1.9	2.0	2.4	3.4	3.1	-	-	-			

Performance certified is for installation type B: Free inlet, Ducted outlet. Performance ratings include the effects of an inlet grille and backdraft shutter. Speed (RPM) shown is nominal. Performance is based on actual speed of test. The sound ratings shown are loudness values in fan sones at 5 ft. (1.5m) in a hemispherical free field calculated per AMCA International Standard 301. Values shown are for installation type B: Free inlet hemispherical sone levels.
* the Watts rating is only for AMCA test method and it is at the static pressure of 0 inch of H_2O.
** the Watts rating is only for IEC test method and the AMCA Certified Ratings Seal does not apply to IEC test method watts.

Low Noise Type Cabinet Fan Model Comparison

Model no.	Voltage	Frequency	Speed	CFM/SONE AT STATIC Pressure (ps-inches of H_2O)											RPM	Watts*	Watts**
				inches of H_2O	0	0.1	0.125	0.25	0.375	0.5	0.75	1	1.25	1.5			
12NSB	220V	60Hz	Hi	CFM	114	105	102	87	65	-	-	-	-	-	1,460	26	23
				Sones	1.5	1.4	1.4	1.3	1.4	-	-	-	-	-			
	240V	50Hz	Hi	CFM	102	90	86	67	39	-	-	-	-	-	1,342	27	22
				Sones	2.0	1.7	1.6	1.4	1.5	-	-	-	-	-			
15NSB	220V	60Hz	Hi	CFM	200	183	177	149	118	83	-	-	-	-	1,520	45	42
				Sones	2.7	2.5	2.4	2.3	2.2	2.0	-	-	-	-			
	240V	50Hz	Hi	CFM	193	177	172	139	94	20	-	-	-	-	1,373	47	37
				Sones	3.7	3.4	3.2	2.6	2.5	2.8	-	-	-	-			
18NSB	220V	60Hz	Hi	CFM	274	261	258	241	222	196	137	-	-	-	1,470	80	73
				Sones	3.3	3.1	3.0	2.9	2.7	2.6	2.7	-	-	-			
	240V	50Hz	Hi	CFM	281	263	259	232	200	163	34	-	-	-	1,342	84	68
				Sones	4.8	4.4	4.4	3.8	3.4	3.0	2.9	-	-	-			
18NFB	220V	60Hz	Hi	CFM	417	399	395	373	347	318	237	-	-	-	1,420	128	119
				Sones	4.0	3.9	3.9	3.9	3.6	3.5	3.4	-	-	-			
	240V	50Hz	Hi	CFM	429	406	400	381	344	290	78	-	-	-	1,327	135	104
				Sones	5.6	5.4	5.4	5.1	4.6	4.3	4.2	-	-	-			
20NSB	220V	60Hz	Hi	CFM	469	459	456	444	433	413	354	275	-	-	1,380	170	159
				Sones	4.0	4.0	3.9	3.8	3.9	4.0	4.1	4.2	-	-			
	240V	50Hz	Hi	CFM	517	500	495	464	424	382	265	110	-	-	1,328	175	135
				Sones	6.0	5.8	5.8	5.4	5.1	4.8	4.5	4.5	-	-			
23NLB	220V	60Hz	Hi	CFM	655	642	640	625	611	597	555	505	440	-	1,400	350	310
				Sones	6.0	6.0	5.9	5.9	5.7	5.7	5.8	5.8	5.8	-			
	240V	50Hz	Hi	CFM	688	670	664	642	614	579	493	388	199	-	1,342	347	260
				Sones	8.8	8.6	8.4	8.1	8.0	7.6	7.2	6.7	6.6	-			
25NSB	220V	60Hz	Hi	CFM	940	924	919	899	877	857	790	710	610	502	1,380	460	425
				Sones	7.1	7.1	7.1	7.0	6.8	6.8	6.7	6.7	6.7	6.9			
	240V	50Hz	Hi	CFM	963	938	935	906	868	822	719	567	395	-	1,305	481	370
				Sones	10.1	9.8	9.7	9.3	9.2	8.8	8.0	7.5	8.2	-			
25NFB	220V	60Hz	Hi	CFM	1,016	1,000	995	975	954	933	875	803	710	590	1,420	680	520
				Sones	8.2	8.2	8.2	8.2	7.9	7.9	7.8	7.6	7.5	7.5			
	240V	50Hz	Hi	CFM	1,057	1,048	1,040	1,010	972	922	811	660	473	-	1,330	537	430
				Sones	12.1	11.9	11.5	11.1	10.6	9.8	8.7	8.7	10.3	-			

Performance certified is for installation type D: Ducted inlet, Ducted outlet.
Performance ratings do not include the effects of appurtenances (accessories), Speed (RPM) shown is nominal.
Performance is based on actual speed of test. The sound ratings shown are loudness values in fan sones at 5ft (1.5m) in a hemispherical free field calculated per AMCA International Standard 301.
Values shown are for installation Type D: ducted inlet hemispherical sone levels. Ratings do not include the effect of duct end correction.
* the Watts rating is only for AMCA test method and it is at the static pressure of 0 inch of H_2O.
** the Watts rating is only for IEC test method and the AMCA Certified Ratings Seal does not apply to IEC test method watts.

Low Noise Type Cabinet Fan (Three Phase Series) Model Comparison (Non-AMCA Certified)

Model No.	Phase	Voltage [V]	Frequency [Hz]	Comsumption [W]	RPM [min^{-1}]	Air Volume [CMH]	Air Volume [CFM]	Noise [dB(A)]	Weight [Kg]	Duct Size [mm]	Impeller Diameter [mm]
25SWC	3	380	50	940	1,375	4,000	2,354	43	60	250 x 500	250
			60	1,450	1,530	4,500	2,648	45			
25SMC	3	380	50	1,180	1,345	5,200	3,060	45	60	250 x 700	250
			60	1,750	1,470	5,500	3,237	46			
28NXC	3	380	50	600	1,295	2,600	1,530	44	28	ø250	280
			60	840	1,380	2,650	1,560	45			

Note: The value in Specification table are representative characteristic value at 380V, 50/60Hz
RPM data is for reference only. Values may vary subject to different conditions.
The above Low Noise Type Cabinet Fan (Three Phase Series) Model are not licensed to bear the AMCA Certified Ratings Seal.

Specification

Industrial Ventilating Fan Model Comparison

Model no.	Voltage	Frequency	CFM/SONE AT STATIC Pressure (ps-inches of H_2O)									RPM	Watts*	Watts**
			inches of H_2O	0	0.05	0.075	0.1	0.125	0.25	0.375	0.5	0.75		FOR AMCA	FOR IEC
25GSE	220V	60Hz	CFM	788	742	715	686	647	-	-	-	-	1570	61	57
			Sones	4.9	4.7	4.5	4.5	4.6	-	-	-	-			
	240V	50Hz	CFM	701	657	633	600	565	187	-	-	-	1400	48	44
			Sones	3.8	3.6	3.6	3.5	3.6	8.6	-	-	-			
30GSE	220V	60Hz	CFM	1308	1247	1217	1184	1153	772	-	-	-	1460	129	119
			Sones	9.0	9.0	9.1	9.0	9.1	9.4	-	-	-			
	240V	50Hz	CFM	1177	1119	1090	1058	1026	561	243	-	-	1315	106	98
			Sones	5.5	5.5	5.6	5.6	5.8	11.1	12.0	-	-			
35GSE	220V	60Hz	CFM	1850	1788	1752	1712	1669	1456	600	-	-	1640	178	161
			Sones	11.9	11.6	12.0	12.4	13.6	14.6	13.4	-	-			
	240V	50Hz	CFM	1615	1548	1506	1458	1411	1147	390	-	-	1435	130	122
			Sones	8.6	8.2	8.2	8.0	8.0	12.6	13.4	-	-			
40GSE	220V	60Hz	CFM	2677	2581	2535	2488	2440	2170	2050	-	-	1550	294	270
			Sones	20.0	20.0	19.7	19.4	19.3	18.9	19.9	-	-			
	240V	50Hz	CFM	2135	2067	2035	2000	1965	1800	1480	-	-	1440	164	151
			Sones	9.0	8.5	8.7	8.7	8.7	13.0	14.2	-	-			

Model no.	Voltage	Frequency	CFM/SONE AT STATIC Pressure (ps-inches of H_2O)					RPM	Watts*	Watts**
			inches of H_2O	0	0.2	0.3	0.4		FOR AMCA	FOR IEC
45GSC	220V	60Hz	CFM	3278	3131	3001	2795	1563	346	325
			Sones	10	10.4	10.6	10.8			
	240V	50Hz	CFM	2854	2648	2454	2030	1430	277	241
			Sones	7.8	7.7	7.8	9.4			
50GSC	220V	60Hz	CFM	3884	3443	3090	2501	1080	347	326
			Sones	10.9	11.3	11.5	11.8			
	240V	50Hz	CFM	3354	2854	2266	912	968	293	271
			Sones	11.7	13.8	14.5	15.4			
60GSC	220V	60Hz	CFM	5038	4349	3943	3560	1088	384	361
			Sones	10.1	9.8	9.5	10.1			
	240V	50Hz	CFM	4402	3855	3366	2972	980	289	263
			Sones	10.3	8.6	8.5	11.5			

Performance certified is for installation type A: Free Inlet, Free Outlet. 1. For models 25/30/35/40GSC, Speed (RPM) shown is nominal; 2. but for models 45/50/60GSC, the Speed (RPM) and watts rating shown are at the static pressure of 0 inch of H2O. Performance is based on actual speed of test. The sound ratings shown are loudness values in fan sones at 5 ft. (1.5m) in a hemispherical free field calculated per AMCA International Standard 301. Values shown are for installation type A: Free Inlet hemispherical sone levels.
* the Watts rating is only for AMCA test method and it is at the static pressure of 0 inch of H_2O.
** the Watts rating is only for IEC test method and the AMCA Certified Ratings Seal does not apply to IEC test method watts.

Industrial Ventilating Fan Model Comparison (Non-AMCA Certified)

Model No.	Phase	Voltage [V]	Frequency [Hz]	Comsumption [W]	RPM [min⁻¹]	Air Volume		Noise [dB(A)]	Weight [Kg]
						[CMH]	[CFM]		
45GTC	3	380	50	220	1,450	5,520	3,249	52	18.5
			60	330	1,690	6,420	3,779	58	
50GTC	3	380	50	320	1,400	6,960	4,097	54	28.5
			60	475	1,590	8,010	4,715	58	
60GTC	3	380	50	310	940	9,420	5,544	49	34
			60	450	1,070	10,920	6,427	53	
30KQT	-	220	50	42	1,185	1,220	718	46	4.9
			60	51	1,255	1,270	747	47	
40KQT	-	220	50	61	1,175	2,060	1,212	49	6.4
			60	76	1,260	2,190	1,289	51	
50AEQ2	-	220	50	108	920	3,630	2,137	54	11.5
			60	130	1,050	4,200	2,472	58	

Note: The value in Specification table are representative characteristic value at 220V, 50/60Hz
RPM data is for reference only. Values may vary subject to different conditions.
The above Industrial Ventilating Fan Model are not licensed to bear the AMCA Certified Ratings Seal.

Wall Mount Ventilating Fan Model Comparison

Model	Voltage	Frequency	CFM/SONE AT STATIC Pressure (ps-inches of H_2O)				RPM	Watts*	Watts**
			inches of H_2O	0	0.025	0.05		FOR AMCA	FOR IEC
15AAQ1	220V	60Hz	CFM	157	122	65	1533	20.6	19.0
			Sones	2.5	1.9	2.3			
	240V	50Hz	CFM	154	120	63	1453	20.1	19.0
			Sones	1.7	1.4	2.1			
20AUH	220V	60Hz	CFM	355	314	196	1410	32.4	28.5
			Sones	2.5	2.5	1.7			
25AUH	220V	60Hz	CFM	514	426	290	1200	37.8	33.0
			Sones	1.8	1.5	1.8			
30AUH 11	220V	60Hz	CFM	572	453	235	856	37.0	33.0
			Sones	1.0	1.7	2.6			
20ALH	220V	60Hz	CFM	328	280	170	1385	32.8	28.5
			Sones	3.5	3.2	3.4			
25ALH	220V	60Hz	CFM	420	372	232	1097	37.5	33.0
			Sones	2.7	2.7	4.6			
30ALF 11	220V	60Hz	CFM	447	288	154	746	37.1	33.0
			Sones	2.0	2.7	2.2			
20ASB	220V	60Hz	CFM	330	259	183	1358	25.5	21.5
			Sones	1.7	1.9	3.9			
20ASB / 20ASB 05	240V	50Hz	CFM	296	198	151	1252	22.4	19.5
			Sones	1.5	1.7	3.2			
25ASB	220V	60Hz	CFM	522	414	240	1277	35.5	30.5
			Sones	1.9	1.6	2.2			
25ASB / 25ASB 05	240V	50Hz	CFM	486	434	314	1194	35.1	29.5
			Sones	2.0	2.0	2.4			
30ASB	220V	60Hz	CFM	637	400	85	1088	39.8	34.5
			Sones	2.0	2.7	2.2			
30ASB / 30ASB 05	240V	50Hz	CFM	706	620	498	1175	38.1	34.0
			Sones	2.9	2.3	2.2			

Model	Voltage	Frequency	CFM/SONE AT STATIC Pressure (ps-inches of H_2O)					RPM	Watts*	Watts**
			inches of H_2O	0	0.02	0.04	0.06		For AMCA	FOR IEC
20AUHT	220V	60Hz	CFM	356	315	271	227	1343	24.5	22
			Sones	2.3	2.4	1.8	2.8			
	240V	50Hz	CFM	338	294	253	171	1234	23.5	21.5
			Sones	2.1	2.4	2	3.5			
25AUHT	220V	60Hz	CFM	515	421	330	227	1113	34.3	31
			Sones	2.5	2.3	1.9	3			
	240V	50Hz	CFM	527	465	400	347	1143	35.2	32
			Sones	5.8	5.6	5.2	4.8			
30AUHT	220V	60Hz	CFM	586	486	335	174	874	40.4	38
			Sones	2.2	2.2	4.1	2.4			
	240V	50Hz	CFM	624	565	491	312	935	41.5	39
			Sones	3.7	3.6	3.6	4.1			
20ALHT	220V	60Hz	CFM	327	294	256	162	1277	24.2	22
			Sones	2.8	2.7	4.3	5.3			
	240V	50Hz	CFM	300	274	234	141	1228	23.5	21.5
			Sones	2.6	2.5	3.8	3.8			
25ALHT	220V	60Hz	CFM	465	409	350	260	1116	40	36
			Sones	3.5	3.2	3	5.4			
	240V	50Hz	CFM	468	418	371	327	1152	35.2	32
			Sones	5.5	5.9	5	5.2			
30ALFT	220V	60Hz	CFM	503	374	230	119	833	42	38
			Sones	2.6	3	3.1	2.5			
	240V	50Hz	CFM	571	494	406	247	921	44.3	40
			Sones	3.8	3.7	5.1	3.8			

Performance certified is for installation type A: Free inlet, Free outlet. Performance ratings include the effects of backdraft shutter for all models and inlet grille for model 20ALH, 25ALH, 30ALF 11, 20ALHT, 25ALHT, 30ALFT. The speed (RPM) and Watts rating shown are at the static pressure of 0 inch of H_2O. The sound ratings shown are loudness values in fan sones at 5 ft. (1.5m) in a hemispherical free field calculated per AMCA International Standard 301. Values shown are for installation type A: Free inlet hemispherical sone levels.
*the Watts rating is only for AMCA test method and it is at the static pressure of 0 inch of H_2O.
**the Watts rating is only for IEC test method and the AMCA Certified Ratings Seal does not apply to IEC test method watts.

Specification

Wall Mount Ventilating Fan Model Comparison (Non-AMCA Certified)

Model No.		Voltage [V]	Frequency [Hz]	Comsumption [W]	RPM [min-1]	Air Volume [CMH]	Air Volume [CFM]	Noise [dB(A)]	Weight [Kg]	Installation space [mm]
25AUFA		220	50	34	1,100	835	491	42	2.8	300 x 300
			60	34	1,080	820	483	42		
20RGF	Exhaust	220	50	20	1,290	580	341	36	2.2	250 x 250
			60	25	1,440	650	383	39		
	Intake		50	16	1,100	405	238	46		
			60	17	1,170	355	209	48		
25RGF	Exhaust	220	50	29	1,120	945	556	38	2.4	300 x 300
			60	34	1,145	950	559	39		
	Intake		50	20	900	640	377	45		
			60	24	995	645	380	44		
30RGF	Exhaust	220	50	31	900	1,165	686	39	2.8	350 x 350
			60	33	995	1,150	677	38		
	Intake		50	24	905	800	471	43		
			60	24	810	745	428	42		
20RGFT	Exhaust	220	50	20	1,260	580	341	36	2.2	250 x 250
			60	24	1,410	630	371	39		
	Intake		50	15	1,150	405	238	46		
			60	17	1,140	355	209	46		
25RGFT	Exhaust	220	50	27	1,090	945	556	38	2.4	300 x 300
			60	31	1,110	950	559	39		
	Intake		50	21	1,010	600	353	45		
			60	23	970	560	330	44		
30RGFT	Exhaust	220	50	31	885	1,165	686	39	2.8	350 x 350
			60	38	800	1,000	589	38		
	Intake		50	24	840	700	412	43		
			60	26	810	680	400	42		
20RLF	Exhaust	220	50	20	1,275	546	321	39	2.4	250 x 250
			60	25	1,290	600	353	43		
	Intake		50	17	1,225	385	227	46		
			60	17	1,145	340	200	49		
25RLF	Exhaust	220	50	29	1,060	876	516	41	2.7	300 x 300
			60	34	1,060	835	491	41		
	Intake		50	20	1,020	570	335	45		
			60	24	970	573	338	43		
30RLE	Exhaust	220	50	31	876	990	583	44	3.1	350 x 350
			60	33	885	945	556	43		
	Intake		50	24	850	730	430	43		
			60	24	776	690	406	44		
20RLFT	Exhaust	220	50	20	1,240	548	321	39	2.4	250 x 250
			60	24	1,290	570	335	43		
	Intake		50	15	1,190	370	218	46		
			60	17	1,180	340	200	46		
25RLFT	Exhaust	220	50	29	1,110	840	494	43	2.7	300 x 300
			60	33	1,110	835	491	43		
	Intake		50	21	1,035	580	330	43		
			60	23.5	1,035	560	583	44.5		
30RLET	Exhaust	220	50	31	890	990	583	44	3.1	350 x 350
			60	38	880	945	558	43		
	Intake		50	25	770	600	353	43		
			60	26	770	600	353	44		

Note: The value in Specification table are representative characteristic value at 220V, 50/60Hz
RPM data is for reference only. Values may vary subject to different conditions.
The above Wall Mount Ventilating Fan Model are not licensed to bear the AMCA Certified Ratings Seal.

Window Mount Ventilating Fan Model Comparison

Model	Voltage	Frequency	CFM/SONE AT STATIC Pressure (ps-inches of H_2O)					RPM	Watts*	Watts**
			inches of H_2O	0	0.05	0.1	0.15		FOR AMCA	FOR IEC
15WHCT	220V	60Hz	CFM	127	94	63	31	2440	14.6	13
			Sones	3.0	3.6	3.5	3.9			
	240V	50Hz	CFM	127	95	68	50	2537	16	15
			Sones	2.3	2.7	3.5	2.8			
20WHCT	220V	60Hz	CFM	250	188	127	78	1517	24.4	22
			Sones	3	3.9	4.5	4.2			
	240V	50Hz	CFM	230	147	103	53	1333	23.4	22
			Sones	2.8	3.8	3.4	4			

Model	Voltage	Frequency	CFM/SONE AT STATIC Pressure (ps-inches of H_2O)					RPM	Watts*	Watts**
			inches of H_2O	0	0.02	0.04	0.06		FOR AMCA	FOR IEC
15WAA 15WAAMN	220V	60Hz	CFM	124	109	91	79	2021	19.6	18
			Sones	3.6	4.5	4.1	4			
	240V	50Hz	CFM	124	109	93	78	2062	18.2	16
			Sones	3.5	4.5	4.1	3.8			
20WAA 20WAAMN	220V	60Hz	CFM	206	147	124	94	1385	18.4	17
			Sones	3.7	3.8	3.5	3.3			
	240V	50Hz	CFM	165	153	141	131	1375	18.6	17.5
			Sones	3.4	3.3	3.4	3.4			

Model	Voltage	Frequency	CFM/SONE AT STATIC Pressure (ps-inches of H_2O)					RPM	Watts*	Watts**
			inches of H_2O	0	0.01	0.02	0.03		FOR AMCA	FOR IEC
15WUD	220V	60Hz	CFM	105	94	79	66	1425	9.7	8.9
			Sones	0.9	0.9	2.2	2.4			
	240V	50Hz	CFM	124	115	104	94	1722	10.3	9.5
			Sones	1.4	1.6	1.8	3.7			
			inches of H_2O	0	0.02	0.03	0.04			
20WUD	220V	60Hz	CFM	188	129	112	88	980	19.2	17.9
			Sones	0.8	1.2	1.8	1.4			
	240V	50Hz	CFM	221	168	141	118	1096	18.5	17.2
			Sones	1.8	1.6	2.2	2.0			

Performance certified is for installation type A: Free Inlet, Free Outlet. Performance ratings include the effects of shutter for all models and inlet grille for model 15WHCT and 20WHCT. The speed (RPM) and Watts rating shown are at the static pressure of 0 inch of H_2O. The sound ratings shown are loudness values in fan sones at 5 ft. (1.5m) in a hemispherical free field calculated per AMCA International Standard 301. Values shown are for installation type A: Free Inlet hemispherical sone levels.
* the Watts raing is only for AMCA test method and it is at the static pressure of 0 inch of H_2O.
** the Watts rating is only for IEC test method and the AMCA Certified Ratings Seal does not apply to IEC test method watts.

Model No.	Voltage [W]	Frequency [W]		Comsumption [W]	RPM [min-1]	Air Volume [CMH]	Air Volume [CFM]	Noise [dB(A)]	Weight [Kg]	Installation Size [mm]
15WJA	220	50	Hi	22	1,878	205	121	46	2.4	ø186 - ø190
			Lo	19	1,325	145	85	36		
		60	Hi	27	2,012	220	129	48		
			Lo	20	1,294	153	90	38		

Note: The value in Specification table are representative characteristic value at 220V, 50/60Hz
RPM data is for reference only. Values may vary subject to different conditions.
The above Window Mount Ventilating Fan Model (15WJA) is not licensed to bear the AMCA Certified Ratings Seal.