RUSKIN®

3900 Dr. Greaves Rd. • Kansas City, MO 64030 • (816) 761-7476 • FAX (816) 765-8955

EME520DD WIND-DRIVEN RAIN RESISTANT STATIONARY LOUVER

EXTRUDED ALUMINUM

STANDARD CONSTRUCTION

FRAME
5" (127) deep, 6063T6 extruded aluminum with .081" (2.1) nominal wall thickness.

BLADES
6063T6 extruded aluminum .063" (1.6) nominal wall thickness. Double drainable blades are sightproof and spaced approximately 2" (51) cen-ter to center.

SCREEN
5/8" x .040" (16 x 1) expanded flattened aluminum bird screen in removable frame. Screen adds approximately 1/2" (13) to louver depth.

FINISH
Mill.

MINIMUM SIZE
12"w x 12"h (305 x 305).

APPROXIMATE SHIPPING WEIGHT
7 lbs. per sq. ft. (34.2 kg/m^2)

MAXIMUM FACTORY ASSEMBLY SIZE
Single sections shall not exceed 120" x 90"h (3048 x 2286) or 90"w x 120"h (2286 x 3048).
Louvers larger than the maximum single section size will require field assembly of smaller sections.

SUPPORTS
Louvers may be provided with rear mounted blade supports that increase overall louver depth depending on louver size, assembly configuration or windload.

Consult Ruskin for additional information.

amca INTERNATIONAL LISTED

IMPACT RESISTANT LOUVER
Basic Protection

See AMCA 512 for AMCA Listing
See AMCA 511 for AMCA Certification
See www.AMCA.org for all certified or listed products

This Label does not signify AMCA airflow performance certification.

Ruskin certifies that the EME520DD shown herein is approved to bear the AMCA Listing Label. The ratings shown are based on tests and procedures performed in accordance with AMCA Publications and comply with the requirements of the AMCA Listing Label Program.

The AMCA Listing Label applies to Wind Borne Debris Impact Resistant Louvers.

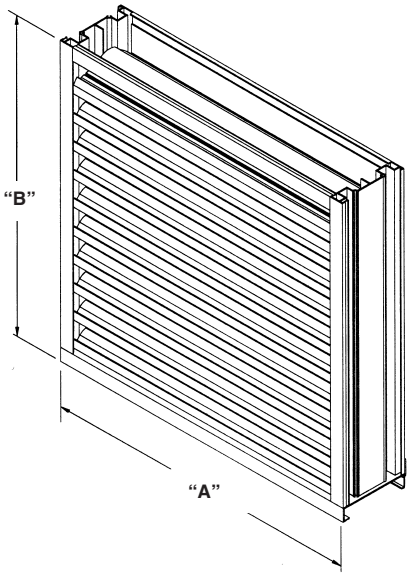

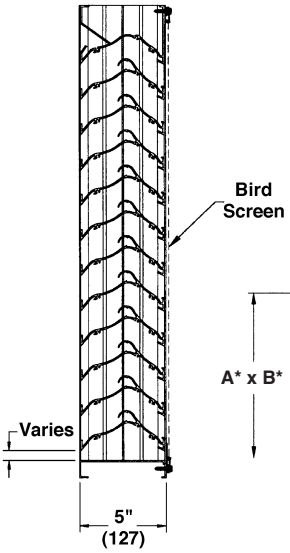

FEATURES

- Closely spaced horizontal blades minimize the penetration of wind-driven rain, reducing damage and additional operating expenses.
- Tested in the AMCA 500-L Wind-Driven Rain Penetration Test.
- Published performance ratings based on testing in accordance with AMCA Publication 511.
- 47% Free Area.
- Excellent pressure drop performance.
- Aluminum construction for low maintenance and high resistance to corrosion.

VARIATIONS

- Extended sill.
- Hinged frame.
- Front or rear security bars.
- Filter racks.
- Installation angles.
- A variety of bird and insect screens.
- Selection of finishes: prime coat, baked enamel (modified fluoropolymer), epoxy, Pearledize 50 & 70, Kynar, clear and color anodize. (Some variation in anodize color consistency is possible).

Consult Ruskin for other special requirements.

FRAME CONSTRUCTION

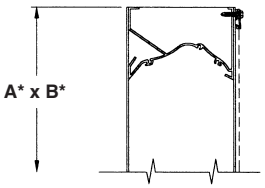

STANDARD

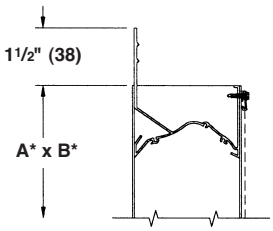

INTEGRAL FLANGE

Dimensions in inches, parenthesis ( ) indicate millimeters.

*Units furnished 1/4" (6) smaller than given opening dimensions.

TAG	QTY.	SIZE		FRAME	VARIATIONS
		A*-WIDE	B*-HIGH		

PROJECT	LOCATION
ARCH./ENGR.	CONTRACTOR
REPRESENTATIVE	DATE

WATER PENETRATION GRAPH

Test size 48" x 48" (1219 x 1219)
Beginning point of water penetration at .01 oz./sq. ft. is above 1250 fpm (381 m/min.)

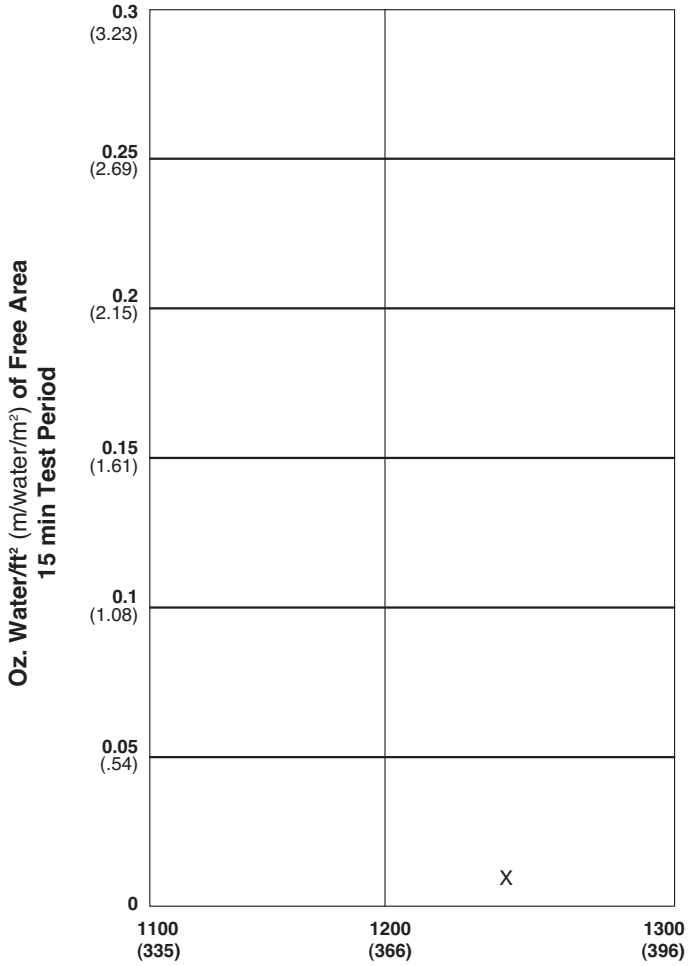

Ruskin Company certifies that the louver shown herein is licensed to bear the AMCA Seal. The ratings shown are based on tests and procedures performed in accordance with AMCA Publication 511 and comply with the requirements of the AMCA Certified Ratings Program. The AMCA Certified Ratings Seal applies to air performance ratings, water penetration ratings and wind driven rain ratings only.

PRESSURE DROP

Pressure Drop testing performed on 48" x 48" (1219 x 1219) unit.

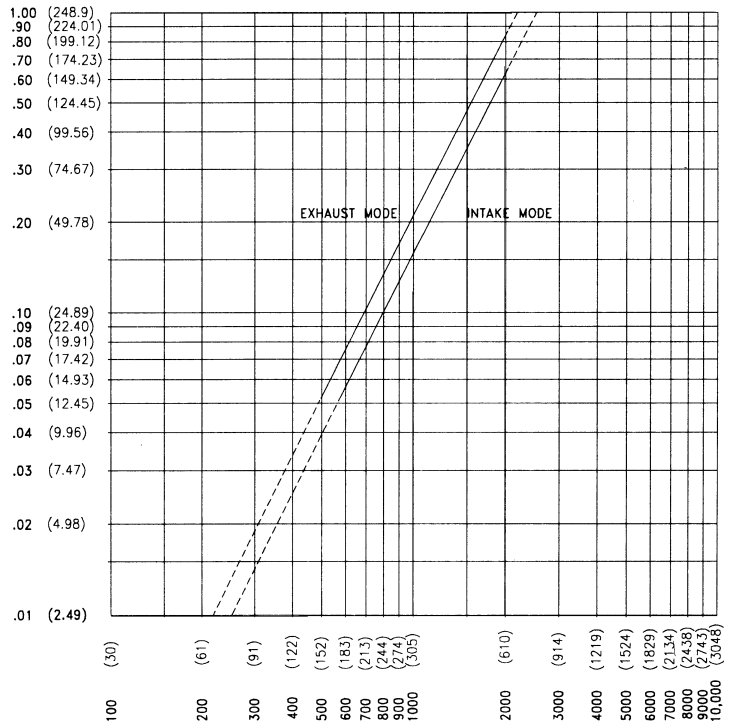

Ratings do not include the effect of a bird screen.

Air Velocity in feet (meters) **per minute through Free Area**
(Data corrected to standard air density and AMCA figure tested to 5.5)

FREE AREA GUIDE

Free Area Guide shows free area in ft² and m² **for various sizes of EME520DD. Width – Inches and** Meters

	12 0.30	18 0.46	24 0.61	30 0.76	36 0.91	42 1.07	48 1.22	54 1.37	60 1.52	66 1.68	72 1.83	78 1.98	84 2.13	90 2.29	96 2.44	102 2.59	108 2.74	114 2.90	120 3.05
12 0.30	**0.10** 0.01	**0.16** 0.01	**0.22** 0.02	**0.28** 0.03	**0.34** 0.03	**0.40** 0.04	**0.45** 0.04	**0.51** 0.05	**0.57** 0.05	**0.63** 0.06	**0.69** 0.06	**0.75** 0.07	**0.81** 0.08	**0.87** 0.08	**0.93** 0.09	**0.99** 0.09	**1.05** 0.10	**1.11** 0.10	**1.17** 0.11
18 0.46	**0.34** 0.03	**0.55** 0.05	**0.76** 0.07	**0.96** 0.09	**1.17** 0.11	**1.38** 0.13	**1.58** 0.15	**1.79** 0.17	**1.99** 0.19	**2.20** 0.20	**2.41** 0.22	**2.61** 0.24	**2.82** 0.26	**3.03** 0.28	**3.23** 0.30	**3.44** 0.32	**3.64** 0.34	**3.85** 0.36	**4.06** 0.38
24 0.61	**0.59** 0.05	**0.94** 0.09	**1.30** 0.12	**1.65** 0.15	**2.00** 0.19	**2.35** 0.22	**2.71** 0.25	**3.06** 0.28	**3.41** 0.32	**3.77** 0.35	**4.12** 0.38	**4.47** 0.42	**4.83** 0.45	**5.18** 0.48	**5.53** 0.51	**5.89** 0.55	**6.24** 0.58	**6.59** 0.61	**6.95** 0.65
30 0.76	**0.92** 0.09	**1.46** 0.14	**2.01** 0.19	**2.56** 0.24	**3.11** 0.29	**3.66** 0.34	**4.21** 0.39	**4.76** 0.44	**5.31** 0.49	**5.86** 0.54	**6.41** 0.60	**6.96** 0.65	**7.50** 0.70	**8.05** 0.75	**8.60** 0.80	**9.15** 0.85	**9.70** 0.90	**10.25** 0.95	**10.80** 1.00
36 0.91	**1.16** 0.11	**1.86** 0.17	**2.55** 0.24	**3.25** 0.30	**3.94** 0.37	**4.64** 0.43	**5.34** 0.50	**6.03** 0.56	**6.73** 0.63	**7.42** 0.69	**8.12** 0.76	**8.82** 0.82	**9.51** 0.88	**10.21** 0.95	**10.91** 1.01	**11.60** 1.08	**12.30** 1.14	**12.99** 1.21	**13.69** 1.27
42 1.07	**1.41** 0.13	**2.25** 0.21	**3.09** 0.29	**3.93** 0.37	**4.78** 0.44	**5.62** 0.52	**6.46** 0.60	**7.31** 0.68	**8.15** 0.76	**8.99** 0.84	**9.84** 0.91	**10.68** 0.99	**11.52** 1.07	**12.36** 1.15	**13.21** 1.23	**14.05** 1.31	**14.89** 1.39	**15.74** 1.46	**16.58** 1.54
48 1.22	**1.65** 0.15	**2.64** 0.25	**3.63** 0.34	**4.62** 0.43	**5.61** 0.52	**6.60** 0.61	**7.59** 0.71	**8.58** 0.80	**9.57** 0.89	**10.56** 0.98	**11.55** 1.07	**12.54** 1.17	**13.53** 1.26	**14.52** 1.35	**15.51** 1.44	**16.50** 1.53	**17.49** 1.63	**18.48** 1.72	**19.47** 1.81
54 1.37	**1.89** 0.18	**3.03** 0.28	**4.17** 0.39	**5.31** 0.49	**6.44** 0.60	**7.58** 0.70	**8.72** 0.81	**9.85** 0.92	**10.99** 1.02	**12.13** 1.13	**13.26** 1.23	**14.40** 1.34	**15.54** 1.45	**16.67** 1.55	**17.81** 1.66	**18.95** 1.76	**20.09** 1.87	**21.22** 1.97	**22.36** 2.08
60 1.52	**2.22** 0.21	**3.55** 0.33	**4.89** 0.45	**6.22** 0.58	**7.55** 0.70	**8.89** 0.83	**10.22** 0.95	**11.55** 1.07	**12.88** 1.20	**14.22** 1.32	**15.55** 1.45	**16.88** 1.57	**18.22** 1.69	**19.55** 1.82	**20.88** 1.94	**22.21** 2.07	**23.55** 2.19	**24.88** 2.31	**26.21** 2.44
66 1.68	**2.47** 0.23	**3.95** 0.37	**5.43** 0.50	**6.91** 0.64	**8.39** 0.78	**9.87** 0.92	**11.34** 1.06	**12.82** 1.19	**14.30** 1.33	**15.78** 1.47	**17.26** 1.61	**18.74** 1.74	**20.22** 1.88	**21.70** 2.02	**23.18** 2.16	**24.66** 2.29	**26.14** 2.43	**27.62** 2.57	**29.10** 2.71
72 1.83	**2.71** 0.25	**4.34** 0.40	**5.96** 0.55	**7.59** 0.71	**9.22** 0.86	**10.84** 1.01	**12.47** 1.16	**14.10** 1.31	**15.72** 1.46	**17.35** 1.61	**18.98** 1.76	**20.60** 1.92	**22.23** 2.07	**23.86** 2.22	**25.49** 2.37	**27.11** 2.52	**28.74** 2.67	**30.37** 2.82	**31.99** 2.98
78 1.98	**2.96** 0.27	**4.73** 0.44	**6.50** 0.60	**8.28** 0.77	**10.05** 0.93	**11.82** 1.10	**13.60** 1.26	**15.37** 1.43	**17.15** 1.59	**18.92** 1.76	**20.69** 1.92	**22.47** 2.09	**24.24** 2.25	**26.01** 2.42	**27.79** 2.58	**29.56** 2.75	**31.33** 2.91	**33.11** 3.08	**34.88** 3.24
84 2.13	**3.20** 0.30	**5.12** 0.48	**7.04** 0.65	**8.96** 0.83	**10.88** 1.01	**12.80** 1.19	**14.72** 1.37	**16.65** 1.55	**18.57** 1.73	**20.49** 1.91	**22.41** 2.08	**24.33** 2.26	**26.25** 2.44	**28.17** 2.62	**30.09** 2.80	**32.01** 2.98	**33.93** 3.16	**35.85** 3.33	**37.77** 3.51
90 2.29	**3.45** 0.32	**5.51** 0.51	**7.58** 0.71	**9.65** 0.90	**11.72** 1.09	**13.78** 1.28	**15.85** 1.47	**17.92** 1.67	**19.99** 1.86	**22.05** 2.05	**24.12** 2.24	**26.19** 2.44	**28.26** 2.63	**30.32** 2.82	**32.39** 3.01	**34.46** 3.20	**36.53** 3.40	**38.59** 3.59	**40.66** 3.78
96 2.44	**3.77** 0.35	**6.04** 0.56	**8.30** 0.77	**10.56** 0.98	**12.83** 1.19	**15.09** 1.40	**17.35** 1.61	**19.62** 1.82	**21.88** 2.03	**24.14** 2.25	**26.41** 2.46	**28.67** 2.67	**30.93** 2.88	**33.20** 3.09	**35.46** 3.30	**37.72** 3.51	**39.99** 3.72	**42.25** 3.93	**44.51** 4.14
102 2.59	**4.02** 0.37	**6.43** 0.60	**8.84** 0.82	**11.25** 1.05	**13.66** 1.27	**16.07** 1.49	**18.48** 1.72	**20.89** 1.94	**23.30** 2.17	**25.71** 2.39	**28.12** 2.62	**30.53** 2.84	**32.94** 3.06	**35.35** 3.29	**37.76** 3.51	**40.17** 3.74	**42.58** 3.96	**44.99** 4.18	**47.40** 4.41
108 2.74	**4.26** 0.40	**6.82** 0.63	**9.38** 0.87	**11.93** 1.11	**14.49** 1.35	**17.05** 1.59	**19.61** 1.82	**22.16** 2.06	**24.72** 2.30	**27.28** 2.54	**29.84** 2.77	**32.39** 3.01	**34.95** 3.25	**37.51** 3.49	**40.06** 3.73	**42.62** 3.96	**45.18** 4.20	**47.74** 4.44	**50.29** 4.68
114 2.90	**4.51** 0.42	**7.21** 0.67	**9.92** 0.92	**12.62** 1.17	**15.32** 1.43	**18.03** 1.68	**20.73** 1.93	**23.44** 2.18	**26.14** 2.43	**28.85** 2.68	**31.55** 2.93	**34.25** 3.19	**36.96** 3.44	**39.66** 3.69	**42.37** 3.94	**45.07** 4.19	**47.78** 4.44	**50.48** 4.69	**53.18** 4.95
120 3.05	**4.75** 0.44	**7.60** 0.71	**10.45** 0.97	**13.31** 1.24	**16.16** 1.50	**19.01** 1.77	**21.86** 2.03	**24.71** 2.30	**27.56** 2.56	**30.41** 2.83	**33.26** 3.09	**36.12** 3.36	**38.97** 3.62	**41.82** 3.89	**44.67** 4.15	**47.52** 4.42	**50.37** 4.68	**53.22** 4.95	**56.07** 5.21

WIND-DRIVEN RAIN PERFORMANCE

Test size is 1m x 1m (39" x 39") core area, 1.04m x 1.12m (41" x 44") nominal. Free Area of test louver is 5.45 ft² (.51m²).

29 mph (47 kph) wind & 3" (76) per hour rain conditions

Core Velocity$_1$ fpm (m/s)	Airflow cfm (m³/min)	Free Area Velocity$_2$ fpm (m/sec.)	Effectiveness Ratio	Class$_3$	Discharge Loss Class Intake
0 (0)	0 (0)	0 (0)	99.9%	A	2
98 (.5)	1060 (30)	226 (1.1)	99.9%	A	2
197 (1.0)	2119 (60)	389 (2.0)	99.9%	A	2
287 (1.5)	3179 (90)	583 (3.0)	99.9%	A	2
381 (1.9)	4239 (120)	778 (4.0)	99.9%	A	2
476 (2.4)	5299 (150)	972 (4.9)	99.9%	A	2
586 (3.0)	6358 (180)	1167 (5.9)	99.8%	A	2
673 (3.4)	7418 (210)	1361 (6.9)	99.7%	A	2
763 (3.9)	8478 (240)	1556 (7.9)	98.9%	B	2
882 (4.5)	9537 (270)	1750 (8.9)	97.3%	B	2
987 (5.0)	10597 (300)	1944 (9.9)	95.3%	B	2

50 mph (80 kph) wind & 8" (203) per hour rain conditions

Core Velocity$_1$ fpm (m/s)	Airflow cfm (m³/min)	Free Area Velocity$_2$ fpm (m/sec.)	Effectiveness Ratio	Class$_3$	Discharge Loss Class Intake
0 (0)	0 (0)	0 (0)	99.4%	A	2
106 (.5)	1060 (30)	226 (1.1)	99.3%	A	2
184 (.9)	2119 (60)	389 (2.0)	99.2%	A	2
282 (1.4)	3179 (90)	583 (3.0)	99.0%	A	2
408 (1.9)	4239 (120)	778 (4.0)	99.0%	A	2
495 (2.5)	5299 (150)	972 (4.9)	98.9%	B	2
567 (2.9)	6358 (180)	1167 (5.9)	98.9%	B	2
680 (3.5)	7418 (210)	1361 (6.9)	98.3%	B	2
791 (4.0)	8478 (240)	1556 (7.9)	97.2%	B	2
882 (4.5)	9537 (270)	1750 (8.9)	95.1%	B	2
982 (5.0)	10597 (300)	1944 (9.9)	23.9%	D	2

NOTES

1. Core area is the open area of the louver face (face area less lover frames). Core Velocity is the airflow velocity through the Core Area of the louver (1m x 1m).
2. Free Area of test size is calculated per AMCA standard 500-L.
3. Wind Driven Rain Penetration Classes:

Class	Effectiveness
A	1 to .99
B	0.989 to 0.95
C	0.949 to 0.80
D	Below 0.8

4. Intake Discharge Loss Class 2

   Discharge Loss Coefficient is calculated by dividing a louvers' actual airflow rate vs. a theoretical airflow for the opening. It provides an indication of the louvers' airflow characteristics.

   Discharge Loss Classes:

Class	Discharge Loss Coefficient
1	0.4 and above
2	0.3 to 0.399
3	0.2 to 0.299
4	0.199 and below

   (The higher the coefficient, the less resistance to airflow.)

5. The AMCA Wind Driven Rain Test is performed in a laboratory environment and incorporates controlled wind, water and system airflow effects. In actual field installations, storms may create conditions not considered by the AMCA test. Penthouse and similar applications where wind can pass through multiple louvers in an enclosure is another condition that is not simulated by AMCA tests. These applications can create elevated water penetration rates through any louver. Because of these uncontrolled situations, it is recommended that provisions to manage water penetration through louvers be included in the building design.

TYPICAL INSTALLATION DETAILS

Masonry Wall

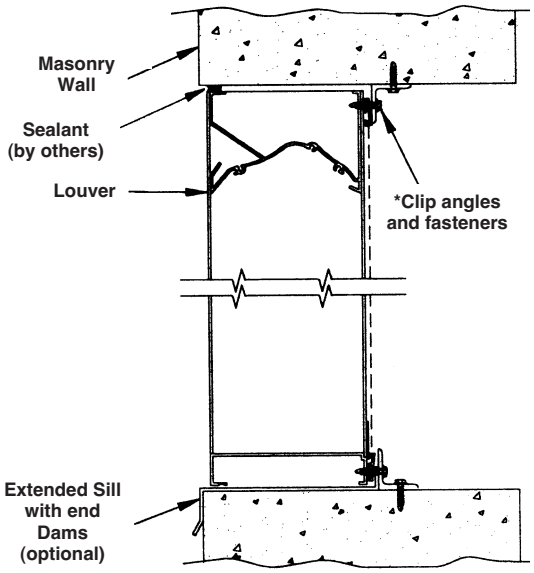

Metal Panel Wall

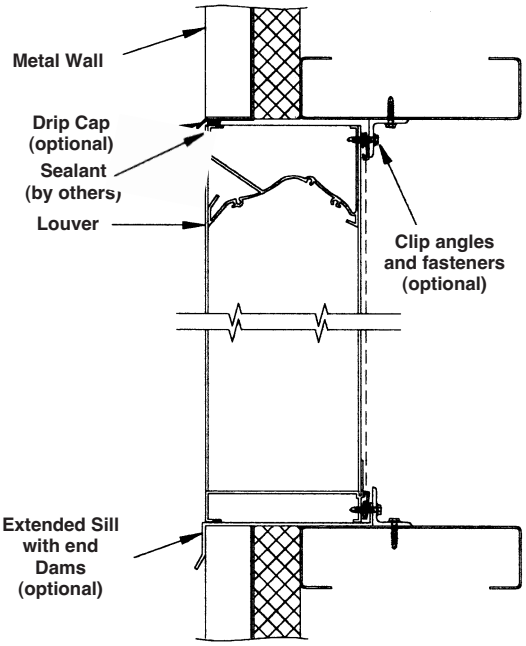

Wood Installation

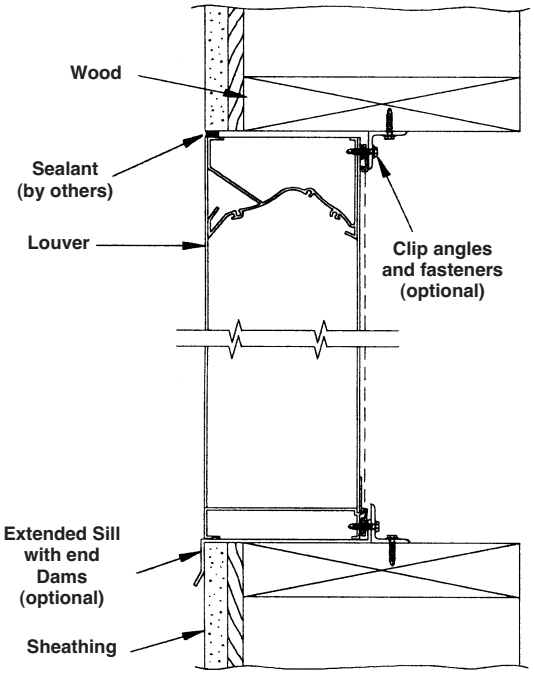

Flange Mount

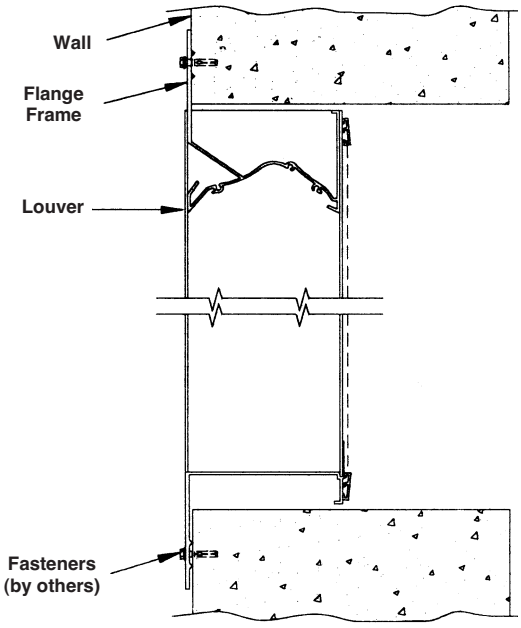

Options avaiable at additional cost. Fasteners to wall are by others.

RUSKIN®

3900 Dr. Greaves Rd.
Kansas City, MO 64030
(816) 761-7476
FAX (816) 765-8955
www.ruskin.com