JINDUN
金盾风机

浙江金盾风机装备有限公司

ZHEJIANGJINDUN FANS EQUIPMENT CO., LTD.

离心风机

4-79 系列离心风机

amca WORLDWIDE CERTIFIED RATINGS
FEG FAN EFFICIENCY GRADE CERTIFIED
AIR MOVEMENT AND CONTROL ASSOCIATION INTERNATIONAL, INC.®
www.amca.org

amca WORLDWIDE CERTIFIED RATINGS
SOUND AND AIR PERFORMANCE
AIR MOVEMENT AND CONTROL ASSOCIATION INTERNATIONAL, INC.®
www.amca.org

浙江金盾风机装备有限公司特此证明，此处所示离心风机4—79系列产品获得了加盖AMCA印章的授权。所示额定值系根据AMCA出版物211和AMCA出版物311所进行测试和程序确定，并符合AMCA认证额定值计划的要求。

Zhejiang Jindun Fans Equipment Co.,Ltd. certifies that the Centrifugal 4-79 Fan shown herein are licensed to bear the AMCA seal.The ratings shown are based on tests and procedures performed in accordance with AMCA Publication 211 and AMCA Publication 311 and comply with the requirements of AMCA Certified Ratings Program.

目录
CATALOGUE

4-79系列离心通风机
4-79SERIES CENTRIFUGAL FAN

4-79系列离心通风机的用途 Application

该系列风机可用作一般工厂及建筑物的室内通风换气，亦可与空调净化设备配套。气体内不许有粘性物质，所含尘土及硬质颗粒物不大于150mg/m³。气体温度不超过80℃环境下既可用作输入气体，也可用作输出气体。

The serial ventilators can be usually used for indoor air ventilation in factories and buildings,and can alsobe used in con-junction with air conditioning and cleaning facilities.It can be used either for air input or for air output in the environment where the contained dust and particulate matters are not more than 150mg/ m^3 and the gas temperature is not more than80℃.

4-79系列离心通风机的型式 Type

4-79系列产品规格从3#-20#共有20个机号。3-6#为A式传动，出风口角度调整范围0°-225°，间隔为45°；7-8#为C式传动，10-20#为E式传动，出风口角度均可制成所需固定角度。

4-79 type serial products inelude 20 versions ranging from3# to 20#. Among them3-6# are of A type drive ,with outlet angle adjusting range from 0° to225° and a step of 45°,7-8# are of C type drive and 10-20#are also of E type drive ,which can be produced with fixedoutlet angle as required.

4-79系列离心通风机的结构 Configuration

该系列风机主要由叶轮、机壳、集风器、轴承箱、轴承座及传动部分所组成。

1、叶轮由后倾圆弧型叶片、曲线型轮盖和平板型轮盘及轮毂组成，并经过动、静平衡校正，具有良好空气动力性能和运转的平稳可靠性。

2、机壳采用优质钢板蜗线型焊接而成，≤12#机壳为整体式，≥14#的机壳沿中分水平面分为两半，由螺栓连接。

3、主轴采用优质碳钢制成，经调质处理在设计上有可靠的安全性和抗疲劳性。

4、集风器、轮盖均以拉伸工艺一次成型，具有光滑流线型表面。

5、轴承箱、座为优质铸铁件加工而成，配用调心轴承，采用机油或油脂润滑。

6、三角带传动系统，按所需性能优化配置（三角带一般选用国产，亦可根据用户特殊选用进口产品）。单机三角带长度按样本参数。

7、订货时应注明风机型号、规格、用途、传动方式、流量、全压（静压）旋转方向及风口角度，以及电动机的型号、极数、规格等，如有特殊要求订货时提出。

8、本公司保留样本更改权，恕不另行通知

The serial ventilator consists of centrifugal impeller, case, wind collector, bearing box, bearing seat and drive unit.

1. Impeller is made up of retro-displaced circular are blades, curved wheel cap, central pivot and wheel hub. It is aligned for dy-namic and static balance, thus resulting in good aerodynamic performance and steady operational reliability.

2. Case is made of high quality steel plate by using helical linetype welding. Integral case is adopted for10#and centrally divided case for14#.

3. Main shaft is made of high quality carbon steel. It is designed with reliable safety and anti-fatigue features.

4. Wind collector and wheel cap are all manufactured directly in shape, uding stretcher forming method. The surface is smooth and streamlined.

5. Bearing box and seat are iron cast pieces, used in conjunction with self-aligning bearing. Both oil and grease are suitable for lubrication.

6. Triangle belt drive system is adopted and optimal selection is made, depending on theperformance required (usually using home-made products or imported products, if required by customer). For single machine, thelength of triangle belt can be seem in sample book.

7. When purchasing order is applied for, the following information and special requirement, if any,shall be provided: Forventilators: type, size, application, way of drive, flow rate, total pressure, rotating direction and vent angle, and for electric motots: type, size number of poles, etc.

8. The company reserves the right to change this specimen withot further notice otherwise.

4-79 系列离心通风机性能参数表 4-79 Series Performance Parameter Table

机号 No	转速 Rev r/min	出口风速 outlet air velocity m/s	全压 Total pressure Pa	流量 Flow m^3/h	轴功率 Fan Input Power kW	配用电动机 Corollary Motor 型号 Model	配用电动机 Corollary Motor 功率 Power kW	总声功率级 Sound Power Level (dB)
3A	2900	2.7	1103	518	0.60	Y90S-2 (B35)	1.5	100
		5.3	1102	1002	0.76			100
		7.4	1059	1416	0.86			100
		9.3	992	1775	0.93			100
		11.3	879	2163	0.99			100
		13.1	755	2497	1.02			101
		15.1	573	2873	1.03			101
		16.9	392	3224	1.02			102
	1450	1.4	276	259	0.08	Y802-4 (B35)	0.75	87
		2.6	276	501	0.09			87
		3.7	265	709	0.11			87
		4.7	248	887	0.12			87
		5.7	220	1082	0.12			87
		6.5	189	1249	0.13			88
		7.5	143	1437	0.13			88
		8.4	98	1612	0.13			89
3.5A	2900	3.1	1502	822	1.30	Y100L-2 (B35)	3	107
		6.0	1500	1592	1.63			107
		8.5	1441	2248	1.85			107
		10.7	1350	2818	2.01			107
		13.0	1196	3435	2.13			107
		15.0	1027	3966	2.21			108
		17.3	780	4562	2.23			108
		19.4	533	5119	2.21			109
	1450	1.6	375	411	0.16	Y90S-4 (B35)	1.1	92
		3.0	375	796	0.20			92
		4.3	360	1124	0.23			92
		5.3	337	1409	0.25			92
		6.5	299	1718	0.27			92
		7.5	257	1983	0.28			93
		8.6	195	2281	0.28			93
		9.7	133	2560	0.28			94
4A	2900	3.6	1962	1227	2.54	$Y132S_1$-2 (B35)	5.5	111
		6.9	1959	2376	3.18			111
		9.8	1883	3356	3.61			111
		12.2	1763	4207	3.93			111
		14.9	1562	5128	4.15			111
		17.2	1342	5919	4.31			112
		19.8	1019	6810	4.35			112
		22.2	696	7642	4.30			113
	1450	1.8	490	614	0.32	Y90S-4 (B35)	1.1	96
		3.5	490	1188	0.40			96
		4.9	471	1678	0.45			96
		6.1	441	2103	0.49			96
		7.5	391	2564	0.52			96
		8.6	336	2960	0.54			97
		9.9	255	3405	0.54			97
		11.1	170	3740	0.54			98

功率额定值千瓦(kW)不包括传输(动)损失。各项性能额定值不包括附属物(附件)的影响。经认证的性能是B类安装-自由入口，管道出口。所示值为安装类型B：自由入口，管道出口的声功率级（入口Lwi）。额定值不包括管道端部校正影响。所示声功率级额定值以分贝为单位，参考声功率为10^{-12}瓦，按照AMCA International标准301计算。

Power rating (kW) does not include transmission losses. Performance ratings do not include the effects of appurtenances (accessories). Performance certified is for installation type B-Free inlet, Ducted outlet. Values shown are for inlet Lwi sound power levels for installation Type B:free inlet, ducted outlet. The sound power level ratings shown are in decibels, referred to 10^{-12}watts, calculated per AMCA International Standard 301。

4-79 系列离心通风机性能参数表 4-79 Series Performance Parameter Table

机号 No	转速 Rev r/min	出口风速 outlet air velocity m/s	全压 Total pressure Pa	流量 Flow m^3/h	轴功率 Fan Input Power kW	配用电动机 Corollary Motor 型号 Model	配用电动机 Corollary Motor 功率 Power kW	总声功率级 Sound Power Level (dB)
4.5A	2900	2.4	2420	1728	5.26	$Y160M_1$-2 (B35)	11	114
		4.1	2492	2916	6.12			114
		6.1	2460	4378	7.07			114
		8.2	2368	5861	7.97			114
		10.0	2208	7142	8.59			114
		11.8	1876	8460	8.89			115
		13.4	1440	9634	8.74			115
		15.1	1024	10843	8.52			116
	1450	1.2	605	864	0.66	Y90L-4 (B35)	1.5	99
		2.0	623	1458	0.76			99
		3.1	615	2189	0.88			99
		4.1	592	2930	0.99			99
		5.0	552	3571	1.07			99
		5.9	469	4230	1.11			100
		6.7	360	4817	1.09			100
		7.6	256	5422	1.07			101
5A	2900	4.4	3065	2397	7.75	$Y160M_2$-2 (B35)	15	118
		8.6	3061	4640	9.72			118
		12.2	2942	6554	11.01			118
		15.2	2755	8217	11.98			118
		18.6	2441	10015	12.67			118
		21.4	2097	11561	13.16			119
		24.7	1592	13301	13.26			119
		27.7	1088	14925	13.13			120
	1450	2.2	766	1199	0.97	$Y100L_1$-4 (B35)	2.2	102
		4.3	765	2320	1.21			102
		6.1	735	3277	1.38			102
		7.6	689	4108	1.50			102
		9.3	610	5007	1.58			102
		10.7	524	5781	1.65			103
		12.3	398	6651	1.66			103
		13.8	272	7463	1.64			104
6A	1450	2.7	1103	2071	2.41	Y132S-4 (B35)	5.5	108
		5.2	1102	4009	3.02			108
		7.3	1059	5663	3.42			108
		9.1	992	7099	3.73			108
		11.1	879	8653	3.94			108
		12.9	755	9989	4.09			109
		14.8	573	11492	4.13			109
		16.6	392	12895	4.08			110
	960	1.8	484	1371	0.70	Y100L-6 (B35)	1.5	99
		3.4	483	2654	0.88			99
		4.8	464	3749	0.99			99
		6.0	435	4700	1.08			99
		7.4	385	5729	1.14			99
		8.5	331	6613	1.19			100
		9.8	251	7609	1.20			100
		11.0	172	8538	1.19			101

功率额定值千瓦(kW)不包括传输(动)损失。各项性能额定值不包括附属物(附件)的影响。经认证的性能是B类安装-自由入口，管道出口。所示值为安装类型B：自由入口，管道出口的声功率级（入口Lwi）。额定值不包括管道端部校正影响。所示声功率级额定值以分贝为单位，参考声功率为10^{-12}瓦，按照AMCA International标准301计算。

Power rating (kW) does not include transmission losses. Performance ratings do not include the effects of appurtenances (accessories). Performance certified is for installation type B-Free inlet, Ducted outlet.Values shown are for inlet Lwi sound power levels for installation Type B:free inlet, ducted outlet. The sound power level ratings shown are in decibels, referred to 10^{-12}watts, calculated per AMCA International Standard 301。

4-79 系列离心通风机性能参数表 4-79 Series Performance Parameter Table

机号 No	转速 Rev r/min	全压 Total pressure Pa	流量 Flow m^3/h	轴功率 Fan Input Power kW	电动机 Motor 型号 Model	电动机 Motor 功率 Power kW	三角皮带 Triangle belt V-belt	风机槽轮 Fan pulley 代号 code	电机槽轮 Motor pulley 代号 code	总声功率级 Sound Power Level (dB)
7C	1800	2444	4916	7.01	Y200L-4	30	3658	50-C4-280	55-C4-355	108
		2381	9813	11.30						108
		2191	14580	14.27						108
		2045	18385	16.41						108
		1876	22003	18.56						107
		1680	25591	20.22						107
		1367	29309	22.29						109
		1082	32897	22.67						109
	1600	1930	4370	4.92	Y180M-4	18.5	3353	50-B4-280	48-B4-315	105
		1881	8723	7.94						105
		1731	12960	10.02						105
		1616	16342	11.52						105
		1482	19559	13.03						104
		1327	22748	14.20						104
		1080	26052	15.65						106
		855	29241	15.92						106
	1250	1178	3414	2.35	Y160M-4	11	3353	50-B4-280	42-B4-250	100
		1148	6815	3.79						100
		1057	10125	4.78						100
		986	12767	5.49						100
		905	15280	6.21						99
		810	17772	6.77						99
		659	20353	7.46						101
		522	22845	7.59						101
	1120	946	3059	1.69	Y132M-4	7.5	3353	50-B4-280	38-B4-224	97
		922	6106	2.72						97
		848	9072	3.44						97
		792	11439	3.95						97
		726	13691	4.47						96
		650	15923	4.87						96
		529	18237	5.37						98
		419	20469	5.46						98
	1000	754	2731	1.20	Y132S-4	5.5	3175	50-B3-280	38-B3-195	93
		735	5452	1.94						93
		676	8100	2.45						93
		631	10214	2.81						93
		579	12224	3.18						92
		518	14217	3.47						92
		422	16282	3.82						94
		334	18276	3.89						94
	900	611	2458	0.88	Y112M-4	4	3175	50-A2-280	28-A2-175	93
		595	4907	1.41						93
		548	7290	1.78						93
		511	9192	2.05						93
		469	11002	2.32						92
		420	12796	2.53						92
		342	14654	2.79						94
		271	16448	2.83						94
	800	483	2185	0.62	$Y100L_2$-4	3	3175	50-A2-280	28-A2-175	90
		470	4361	0.99						90
		433	6480	1.25						90
		404	8171	1.44						90
		371	9779	1.63						89
		332	11374	1.77						89
		270	13026	1.96						91
		214	14621	1.99						91

功率额定值千瓦(kW)不包括传输(动)损失。各项性能额定值不包括附属物(附件)的影响。经认证的性能是B类安装-自由入口，管道出口。所示值为安装类型B：自由入口，管道出口的声功率级（入口Lwi）。额定值不包括管道端部校正影响。所示声功率级额定值以分贝为单位，参考声功率为10^{-12}瓦，按照AMCA International标准301计算。

Power rating (kW) does not include transmission losses. Performance ratings do not include the effects of appurtenances (accessories). Performance certified is for installation type B-Free inlet, Ducted outlet.Values shown are for inlet Lwi sound power levels for installation Type B:free inlet, ducted outlet. The sound power level ratings shown are in decibels, referred to 10^{-12}watts, calculated per AMCA International Standard 301。

4-79 系列离心通风机性能参数表 4-79 Series Performance Parameter Table

机号 No	转速 Rev r/min	全压 Total pressure Pa	流量 Flow m^3/h	轴功率 Fan Input Power kW	电动机 Motor 型号 Model	电动机 Motor 功率 Power kW	三角皮带 Triangle belt V-belt	风机槽轮 Fan pulley 代号 code	电机槽轮 Motor pulley 代号 code	总声功率级 Sound Power Level (dB)
8C	1600	2522	6523	9.60	Y225S-4	37	3658	50-C4-280	55-C4-315	109
		2457	13021	15.48						109
		2261	19346	19.54						109
		2111	24394	22.47						109
		1936	29195	25.41						108
		1733	33956	27.69						108
		1411	38889	30.52						110
		1117	43649	31.04						110
	1270	1589	5177	4.80	Y180M-4	18.5	3658	50-B4-280	42-B4-250	104
		1548	10335	7.74						104
		1424	15356	9.77						104
		1330	19363	11.24						104
		1220	23174	12.71						103
		1092	26952	13.85						103
		889	30868	15.26						105
		704	34646	15.52						105
	1120	1236	4566	3.29	Y160L-4	15	3658	50-B4-280	42-B4-250	102
		1204	9114	5.31						102
		1108	13542	6.70						102
		1034	17076	7.71						102
		949	20437	8.72						101
		849	23769	9.50						101
		691	27222	10.47						103
		547	30554	10.65						103
	1000	985	4077	2.34	Y160M-4	11	3556	50-B4-280	38-B4-200	99
		960	8138	3.78						99
		883	12091	4.77						99
		824	15246	5.48						99
		756	18247	6.20						98
		677	21222	6.76						98
		551	24305	7.45						100
		436	27281	7.58						100
	900	798	3669	1.71	Y132M-4	7.5	3556	50-B4-280	38-B4-180	97
		778	7324	2.75						97
		715	10882	3.48						97
		668	13722	4.00						97
		612	16422	4.52						96
		548	19100	4.93						96
		447	21875	5.43						98
		353	24553	5.52						98
	800	630	3261	1.20	Y132S-4	5.5	3556	50-B4-280	28-B4-160	94
		614	6510	1.93						94
		565	9673	2.44						94
		528	12197	2.81						94
		484	14598	3.18						93
		433	16978	3.46						93
		353	19444	3.81						95
		279	21824	3.88						95
	710	497	2894	0.84	Y112M-4	4	3556	50-A2-280	28-A2-140	92
		484	5778	1.35						92
		445	8585	1.71						92
		416	10825	1.96						92
		381	12955	2.22						91
		341	15068	2.42						91
		278	17257	2.67						93
		220	19369	2.71						93

功率额定值千瓦(kW)不包括传输(动)损失。各项性能额定值不包括附属物(附件)的影响。经认证的性能是B类安装-自由入口，管道出口。所示值为安装类型B：自由入口，管道出口的声功率级（入口Lwi）。额定值不包括管道端部校正影响。所示声功率级额定值以分贝为单位，参考声功率为10^{-12}瓦，按照AMCA International标准301计算。

Power rating (kW) does not include transmission losses. Performance ratings do not include the effects of appurtenances (accessories). Performance certified is for installation type B-Free inlet, Ducted outlet.Values shown are for inlet Lwi sound power levels for installation Type B:free inlet, ducted outlet. The sound power level ratings shown are in decibels, referred to 10^{-12}watts, calculated per AMCA International Standard 301。

4-79 系列离心通风机性能参数表 4-79 Series Performance Parameter Table

机号 No	转速 Rev r/min	全压 Total pressure Pa	流量 Flow m^3/h	轴功率 Fan Input Power kW	电动机 Motor 型号 Model	电动机 Motor 功率 Power kW	三角皮带 Triangle belt V-belt	风机槽轮 Fan pulley 代号 code	电机槽轮 Motor pulley 代号 code	总声功率级 Sound Power Level (dB)
10E	1300	2601	10351	15.71	Y250M-4	55	4572	65-D5-380	65-D5-340	112
		2535	20663	25.33						112
		2332	30700	31.98						112
		2177	38711	36.77						112
		1997	46331	41.60						111
		1788	53885	45.32						111
		1456	61713	49.95						113
		1152	69267	50.81						113
	1170	2107	9316	11.45	Y225M-4	45	4572	65-D5-380	60-D5-310	109
		2053	18596	18.47						109
		1889	27630	23.31						109
		1763	34840	26.81						109
		1617	41697	30.32						108
		1448	48496	33.04						108
		1179	55542	36.42						110
		933	62340	37.04						110
	1000	1539	7962	7.15	Y200L-4	30	4572	65-C4-380	48-C4-260	106
		1500	15894	11.53						106
		1380	23615	14.56						106
		1288	29778	16.74						106
		1181	35639	18.93						105
		1058	41450	20.63						105
		861	47472	22.74						107
		682	53282	23.13						107
	940	1360	7484	5.94	Y180L-4	22	4521	65-B4-380	48-B4-250	105
		1325	14941	9.58						104
		1219	22198	12.09						105
		1138	27991	13.90						105
		1044	33501	15.73						103
		935	38963	17.13						104
		761	44623	18.89						106
		602	50085	19.21						105
	830	1060	6609	4.09	Y160L-4	15	4521	65-B4-380	42-B4-224	102
		1033	13192	6.59						102
		951	19601	8.32						102
		887	24716	9.57						102
		814	29580	10.83						101
		729	34403	11.79						101
		593	39401	13.00						103
		470	44224	13.22						103
	740	843	5892	2.90	Y160M-4	11	4521	65-B4-380	42-B4-200	99
		821	11762	4.67						99
		756	17475	5.90						99
		705	22036	6.78						99
		647	26373	7.67						98
		579	30673	8.36						98
		472	35129	9.21						100
		373	39429	9.37						100
	660	670	5255	2.06	Y160M-6	7.5	4521	65-B4-380	42-B4-265	97
		653	10490	3.32						97
		601	15586	4.18						97
		561	19653	4.81						97
		515	23522	5.44						96
		461	27357	5.93						96
		375	31331	6.54						98
		297	35166	6.65						98

功率额定值千瓦(kW)不包括传输(动)损失。各项性能额定值不包括附属物(附件)的影响。经认证的性能是B类安装-自由入口，管道出口。所示值为安装类型B：自由入口，管道出口的声功率级（入口Lwi）。额定值不包括管道端部校正影响。所示声功率级额定值以分贝为单位，参考声功率为10^{-12}瓦，按照AMCA International标准301计算。

Power rating (kW) does not include transmission losses. Performance ratings do not include the effects of appurtenances (accessories). Performance certified is for installation type B-Free inlet, Ducted outlet.Values shown are for inlet Lwi sound power levels for installation Type B:free inlet, ducted outlet. The sound power level ratings shown are in decibels, referred to 10^{-12}watts, calculated per AMCA International Standard 301。

4-79 系列离心通风机性能参数表 4-79 Series Performance Parameter Table

机号 No	转速 Rev r/min	全压 Total pressure Pa	流量 Flow m^3/h	轴功率 Fan Input Power kW	电动机 Motor 型号 Model	电动机 Motor 功率 Power kW	三角皮带 Triangle belt V-belt	风机槽轮 Fan pulley 代号 code	电机槽轮 Motor pulley 代号 code	总声功率级 Sound Power Level (dB)
10E	580	518	4618	1.40	Y132S-4	5.5	4521	65-B4-380	38-B4-230	94
		505	9219	2.25						94
		464	13697	2.84						94
		433	17271	3.27						94
		397	20671	3.69						93
		356	24041	4.02						93
		290	27534	4.44						95
		229	30904	4.51						95
12E	1040	2397	14309	20.02	Y280S-4	75	4572	65-D5-380	75-D5-270	112
		2336	28564	32.27						112
		2149	42439	40.74						112
		2006	53514	46.85						112
		1840	64047	52.99						111
		1648	74490	57.74						111
		1341	85312	63.64						113
		1062	95755	64.74						113
	940	1958	12933	14.78	Y250M-4	55	4572	65-D5-380	65-D5-250	110
		1908	25817	23.83						110
		1756	38359	30.08						110
		1639	48369	34.59						110
		1503	57889	39.13						109
		1346	67328	42.63						109
		1096	77109	46.99						111
		867	86548	47.80						111
	830	1527	11420	10.17	Y250M-6	37	4572	65-D5-380	65-D5-340	107
		1488	22796	16.41						107
		1369	33870	20.71						107
		1278	42709	23.82						107
		1172	51115	26.94						106
		1049	59449	29.35						106
		854	68086	32.35						108
		676	76420	32.91						108
	740	1214	10181	7.21	Y225M-6	30	4572	65-C4-380	55-C4-300	105
		1183	20324	11.63						105
		1088	30197	14.68						105
		1016	38077	16.88						105
		932	45572	19.09						104
		834	53003	20.80						104
		679	60703	22.93						106
		537	68133	23.32						106
	660	965	9081	5.12	$Y200L_1$-6	18.5	4572	65-C4-380	55-C4-265	102
		941	18127	8.25						102
		866	26933	10.41						102
		808	33961	11.97						102
		741	40645	13.54						101
		664	47273	14.76						101
		540	54140	16.27						103
		428	60768	16.55						103
	580	746	7980	3.47	Y180L-6	15	4521	65-B4-380	42-B4-235	100
		727	15930	5.60						100
		668	23668	7.07						100
		624	29845	8.13						100
		572	35719	9.19						99
		512	41543	10.01						99
		417	47578	11.04						101
		330	53402	11.23						101

功率额定值千瓦(kW)不包括传输(动)损失。各项性能额定值不包括附属物(附件)的影响。经认证的性能是B类安装-自由入口，管道出口。所示值为安装类型B：自由入口，管道出口的声功率级（入口Lwi）。额定值不包括管道端部校正影响。所示声功率级额定值以分贝为单位，参考声功率为10^{-12}瓦，按照AMCA International标准301计算。

Power rating (kW) does not include transmission losses. Performance ratings do not include the effects of appurtenances (accessories). Performance certified is for installation type B-Free inlet, Ducted outlet.Values shown are for inlet Lwi sound power levels for installation Type B:free inlet, ducted outlet. The sound power level ratings shown are in decibels, referred to 10^{-12}watts, calculated per AMCA International Standard 301。

4-79 系列离心通风机性能参数表 4-79 Series Performance Parameter Table

机号 No	转速 Rev r/min	全压 Total pressure Pa	流量 Flow m^3/h	轴功率 Fan Input Power kW	电动机 Motor 型号 Model	电动机 Motor 功率 Power kW	三角皮带 Triangle belt V-belt	风机槽轮 Fan pulley 代号 code	电机槽轮 Motor pulley 代号 code	总声功率级 Sound Power Level (dB)
12E	520	599	7155	2.50	Y160L-6	11	4521	65-B4-380	42-B4-210	97
		584	14282	4.03						97
		537	21220	5.09						97
		502	26757	5.86						97
		460	32024	6.62						96
		412	37245	7.22						96
		335	42656	7.96						98
		265	47877	8.09						98
	470	490	6467	1.85	Y160M-6	7.5	4521	65-B4-380	38-B4-185	95
		477	12909	2.98						95
		439	19179	3.76						95
		410	24184	4.32						95
		376	28944	4.89						94
		337	33664	5.33						94
		274	38555	5.87						96
		217	43274	5.98						96
14E	830	2078	18134	21.99	Y315M-6	90	6096	90-D5-480	80-D5-410	112
		2025	36199	35.46						112
		1863	53784	44.76						112
		1739	67820	51.47						112
		1595	81168	58.22						111
		1428	94402	63.43						111
		1163	108118	69.92						113
		920	121352	71.13						113
	740	1652	16168	15.58	Y280M-6	55	5588	90-D5-480	75-D5-370	110
		1610	32274	25.13						110
		1481	47952	31.72						110
		1383	60466	36.48						110
		1268	72367	41.26						109
		1135	84166	44.95						109
		924	96394	49.55						111
		732	108193	50.41						111
	680	1395	14857	12.09	Y80S-6	45	5588	90-D5-480	65-D5-340	108
		1359	29657	19.50						108
		1251	44064	24.62						108
		1168	55563	28.31						108
		1071	66499	32.02						107
		959	77342	34.88						107
		781	88578	38.45						109
		618	99421	39.11						109
	580	1015	12672	7.50	Y225M-6	30	5588	90-C4-480	55-C4-300	104
		989	25296	12.10						104
		910	37584	15.28						104
		849	47392	17.56						104
		779	56720	19.87						103
		698	65968	21.65						103
		568	75552	23.86						105
		449	84800	24.27						105
	520	816	11361	5.41	$Y200L_2$-6	22	5334	90-C4-480	55-C4-265	102
		795	22679	8.72						102
		731	33696	11.01						102
		683	42489	12.66						102
		626	50852	14.32						101
		561	59144	15.60						101
		456	67736	17.19						103
		361	76028	17.49						103

功率额定值千瓦(kW)不包括传输(动)损失。各项性能额定值不包括附属物(附件)的影响。经认证的性能是B类安装-自由入口，管道出口。所示值为安装类型B：自由入口，管道出口的声功率级（入口Lwi）。额定值不包括管道端部校正影响。所示声功率级额定值以分贝为单位，参考声功率为10^{-12}瓦，按照AMCA International标准301计算。

Power rating (kW) does not include transmission losses. Performance ratings do not include the effects of appurtenances (accessories). Performance certified is for installation type B-Free inlet, Ducted outlet.Values shown are for inlet Lwi sound power levels for installation Type B:free inlet, ducted outlet. The sound power level ratings shown are in decibels, referred to 10^{-12}watts, calculated per AMCA International Standard 301。

4-79 系列离心通风机性能参数表 4-79 Series Performance Parameter Table

机号 No	转速 Rev r/min	全压 Total pressure Pa	流量 Flow m^3/h	轴功率 Fan Input Power kW	电动机 Motor 型号 Model	电动机 Motor 功率 Power kW	三角皮带 Triangle belt V-belt	风机槽轮 Fan pulley 代号 code	电机槽轮 Motor pulley 代号 code	总声功率级 Sound Power Level (dB)
14E	460	638	10050	3.74	Y180L-6	15	5334	90-C4-480	48-C4-235	99
		622	20062	6.04						99
		572	29808	7.62						99
		534	37587	8.76						99
		490	44985	9.91						98
		439	52319	10.80						98
		357	59921	11.90						100
		283	67255	12.11						100
	420	532	9176	2.85	Y160L-6	11	5334	90-B4-480	42-B4-210	97
		519	18318	4.59						97
		477	27216	5.80						97
		445	34318	6.67						97
		408	41073	7.54						96
		366	47770	8.22						96
		298	54710	9.06						98
		236	61407	9.22						98
16E	740	2158	24134	30.38	$Y315L_1$-6	110	6858	90-D5-590	80-D5-455	114
		2103	48176	48.99						114
		1935	71578	61.85						114
		1806	90258	71.12						114
		1656	108023	80.45						113
		1483	125636	87.65						113
		1207	143888	96.61						115
		955	161501	98.28						115
	660	1716	21525	21.56	Y315M-6	90	6858	90-D5-590	80-D5-410	111
		1672	42968	34.76						111
		1539	63840	43.88						111
		1437	80500	50.46						111
		1318	96345	57.08						110
		1180	112053	62.18						110
		960	128333	68.55						112
		760	144041	69.72						112
	580	1325	18916	14.63	Y280M-6	55	6858	90-D5-590	75-D5-355	108
		1292	37760	23.59						108
		1188	56102	29.78						108
		1109	70743	34.25						108
		1017	84667	38.73						107
		911	98471	42.20						107
		742	112777	46.52						109
		587	126582	47.32						109
	510	1025	16633	9.95	Y250M-6	37	6350	90-C4-590	65-D5-315	106
		999	33202	16.04						106
		919	49331	20.25						106
		858	62205	23.28						106
		787	74448	26.33						105
		704	86587	28.69						105
		574	99166	31.63						107
		454	111305	32.17						107
	470	870	15328	7.78	Y225M-6	30	6350	90-C4-590	60-C4-300	104
		848	30598	12.55						104
		780	45462	15.85						104
		728	57326	18.22						104
		668	68609	20.61						103
		598	79796	22.46						103
		487	91389	24.75						105
		385	102575	25.18						105

功率额定值千瓦(kW)不包括传输(动)损失。各项性能额定值不包括附属物(附件)的影响。经认证的性能是B类安装-自由入口，管道出口。所示值为安装类型B：自由入口，管道出口的声功率级（入口Lwi）。额定值不包括管道端部校正影响。所示声功率级额定值以分贝为单位，参考声功率为10^{-12}瓦，按照AMCA International标准301计算。

Power rating (kW) does not include transmission losses. Performance ratings do not include the effects of appurtenances (accessories). Performance certified is for installation type B-Free inlet, Ducted outlet.Values shown are for inlet Lwi sound power levels for installation Type B:free inlet, ducted outlet. The sound power level ratings shown are in decibels, referred to 10^{-12}watts, calculated per AMCA International Standard 301。

4-79 系列离心通风机性能参数表 4-79 Series Performance Parameter Table

机号 No	转速 Rev r/min	全压 Total pressure Pa	流量 Flow m^3/h	轴功率 Fan Input Power kW	电动机 Motor 型号 Model	电动机 Motor 功率 Power kW	三角皮带 Triangle belt V-belt	风机槽轮 Fan pulley 代号 code	电机槽轮 Motor pulley 代号 code	总声功率级 Sound Power Level (dB)
16E	420	695	13698	5.56	$Y200L_2$-6	22	6350	90-C4-590	55-C4-265	101
		677	27343	8.96						101
		623	40626	11.31						101
		582	51227	13.00						101
		534	61310	14.71						100
		478	71307	16.02						100
		389	81666	17.66						102
		308	91663	17.97						102
	370	539	12067	3.80	Y180L-6	15	6350	90-C4-590	48-C4-235	99
		526	24088	6.12						99
		484	35789	7.73						99
		451	45129	8.89						99
		414	54011	10.06						98
		371	62818	10.96						98
		302	71944	12.08						100
		239	80751	12.28						100
18E	660	2172	30647	38.85	$Y355M_1$-6	160	7112	100-D7-640	80-D7-440	115
		2117	61179	62.64						115
		1948	90898	79.08						115
		1818	114618	90.93						115
		1667	137178	102.85						114
		1493	159545	112.05						114
		1216	182724	123.52						116
		962	205090	125.65						116
	580	1678	26933	26.36	$Y315L_2$-8	110	7112	100-D5-510	80-D5-510	112
		1635	53763	42.51						112
		1504	79880	53.67						112
		1404	100725	61.71						112
		1288	120551	69.80						111
		1153	140206	76.05						111
		939	160576	83.83						113
		743	180231	85.27						113
	520	1348	24146	19.00	$Y315M_1$-8	75	7112	100-D5-640	80-D5-475	110
		1314	48202	30.64						110
		1209	71616	38.68						110
		1129	90305	44.47						110
		1035	108080	50.30						109
		927	125702	54.80						109
		755	143964	60.41						111
		597	161586	61.45						111
	470	1102	21825	14.03	Y315S-8	55	6858	100-C4-640	75-D5-410	107
		1073	43567	22.62						107
		988	64730	28.56						107
		922	81622	32.84						107
		846	97688	37.14						106
		757	113615	40.47						106
		616	130122	44.61						108
		488	146049	45.37						108
	420	880	19503	10.01	Y280S-8	37	6858	100-C4-640	65-C4-370	105
		857	38932	16.14						105
		789	57844	20.38						105
		736	72939	23.43						105
		675	87295	26.50						104
		605	101529	28.88						104
		492	116279	31.83						106
		390	130512	32.38						106

功率额定值千瓦(kW)不包括传输(动)损失。各项性能额定值不包括附属物(附件)的影响。经认证的性能是B类安装-自由入口，管道出口。所示值为安装类型B：自由入口，管道出口的声功率级（入口Lwi）。额定值不包括管道端部校正影响。所示声功率级额定值以分贝为单位，参考声功率为10^{-12}瓦，按照AMCA International标准301计算。

Power rating (kW) does not include transmission losses. Performance ratings do not include the effects of appurtenances (accessories). Performance certified is for installation type B-Free inlet, Ducted outlet.Values shown are for inlet Lwi sound power levels for installation Type B:free inlet, ducted outlet. The sound power level ratings shown are in decibels, referred to 10^{-12}watts, calculated per AMCA International Standard 301。

4-79 系列离心通风机性能参数表 4-79 Series Performance Parameter Table

机号 No	转速 Rev r/min	全压 Total pressure Pa	流量 Flow m^3/h	轴功率 Fan Input Power kW	电动机 Motor 型号 Model	电动机 Motor 功率 Power kW	三角皮带 Triangle belt V-belt	风机槽轮 Fan pulley 代号 code	电机槽轮 Motor pulley 代号 code	总声功率级 Sound Power Level (dB)
18E	370	683	17181	6.84	Y250M-8	30	6858	100-C4-640	60-C4-330	102
		665	34297	11.04						102
		612	50958	13.93						102
		571	64256	16.02						102
		524	76903	18.12						101
		469	89442	19.74						101
		382	102436	21.76						103
		302	114975	22.14						103
	330	543	15324	4.86	Y225S-8	18.5	6858	100-C4-640	55-C4-330	100
		529	30589	7.83						100
		487	45449	9.88						100
		455	57309	11.37						100
		417	68589	12.86						99
		373	79772	14.01						99
		304	91362	15.44						101
		240	102545	15.71						101
20E	580	2071	36945	44.65	Y355M_2-8	160	7620	100-D7-740	95-D7-590	115
		2018	73749	71.99						115
		1857	109574	90.89						115
		1733	138169	104.51						115
		1590	165364	118.21						114
		1424	192327	128.79						114
		1159	220268	141.97						116
		917	247230	144.41						116
	520	1665	33123	32.17	Y355M_1-8	132	7620	100-D7-740	80-D7-530	113
		1622	66120	51.88						113
		1493	98239	65.50						113
		1393	123876	75.31						113
		1278	148258	85.19						112
		1144	172431	92.81						112
		932	197482	102.31						114
		737	221655	104.07						114
	470	1360	29938	23.76	Y315L_1-8	90	7112	100-D5-740	80-D5-475	111
		1325	59762	38.31						111
		1219	88793	48.36						111
		1138	111965	55.61						111
		1044	134002	62.90						110
		935	155851	68.53						110
		761	178493	75.54						112
		602	200342	76.84						112
	420	1086	26753	16.95	Y315M-8	75	7112	100-D5-740	80-D5-425	108
		1058	53405	27.34						108
		974	79347	34.51						108
		909	100053	39.68						108
		834	119747	44.89						107
		746	139271	48.90						107
		608	159505	53.91						109
		481	179029	54.83						109
	370	843	23568	11.59	Y280M-8	45	7112	100-D5-740	75-D5-370	105
		821	47047	18.69						105
		756	69901	23.59						105
		705	88142	27.13						105
		647	105491	30.69						104
		579	122691	33.43						104
		472	140516	36.86						106
		373	157716	37.49						106

功率额定值千瓦(kW)不包括传输(动)损失。各项性能额定值不包括附属物(附件)的影响。经认证的性能是B类安装-自由入口，管道出口。所示值为安装类型B：自由入口，管道出口的声功率级（入口Lwi）。额定值不包括管道端部校正影响。所示声功率级额定值以分贝为单位，参考声功率为10^{-12}瓦，按照AMCA International标准301计算。

Power rating (kW) does not include transmission losses. Performance ratings do not include the effects of appurtenances (accessories). Performance certified is for installation type B-Free inlet, Ducted outlet.Values shown are for inlet Lwi sound power levels for installation Type B:free inlet, ducted outlet. The sound power level ratings shown are in decibels, referred to 10^{-12}watts, calculated per AMCA International Standard 301。

4-79 系列离心通风机性能参数表 4-79 Series Performance Parameter Table

机号 No	转速 Rev r/min	全压 Total pressure Pa	流量 Flow m^3/h	轴功率 Fan Input Power kW	电动机 Motor		三角皮带 Triangle belt V-belt	风机槽轮 Fan pulley	电机槽轮 Motor pulley	总声功率级 Sound Power Level (dB)
					型号 Model	功率 Power kW		代号 code	代号 code	
20E	330	670	21020	8.22	Y250M-8	30	6858	100-C4-740	65-C4-330	103
		653	41961	13.26						103
		601	62344	16.74						103
		561	78613	19.25						103
		515	94087	21.77						102
		461	109427	23.72						102
		375	125325	26.15						104
		297	140666	26.60						104

功率额定值千瓦(kW)不包括传输(动)损失。各项性能额定值不包括附属物(附件)的影响。经认证的性能是B类安装-自由入口，管道出口。所示值为安装类型B：自由入口，管道出口的声功率级（入口Lwi）。额定值不包括管道端部校正影响。所示声功率级额定值以分贝为单位，参考声功率为10^{-12}瓦，按照AMCA International标准301计算。

Power rating (kW) does not include transmission losses. Performance ratings do not include the effects of appurtenances (accessories). Performance certified is for installation type B-Free inlet, Ducted outlet.Values shown are for inlet Lwi sound power levels for installation Type B:free inlet, ducted outlet. The sound power level ratings shown are in decibels, referred to 10^{-12}watts, calculated per AMCA International Standard 301。

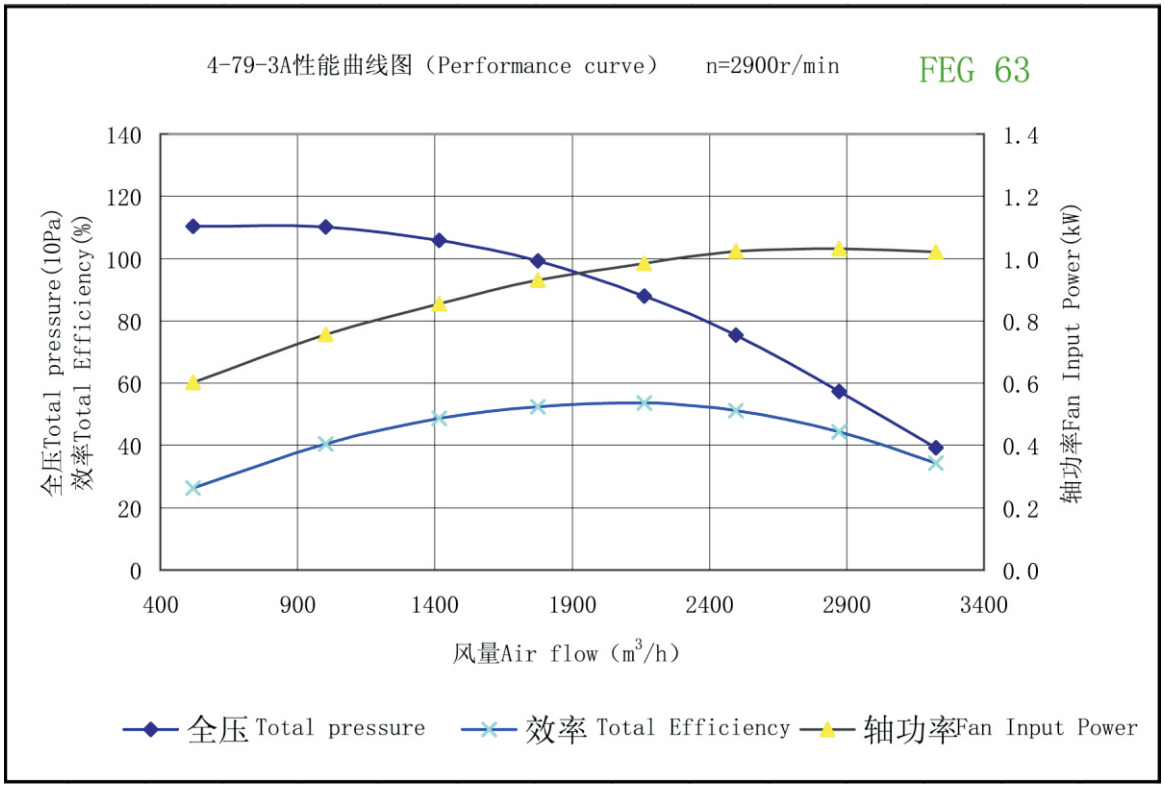

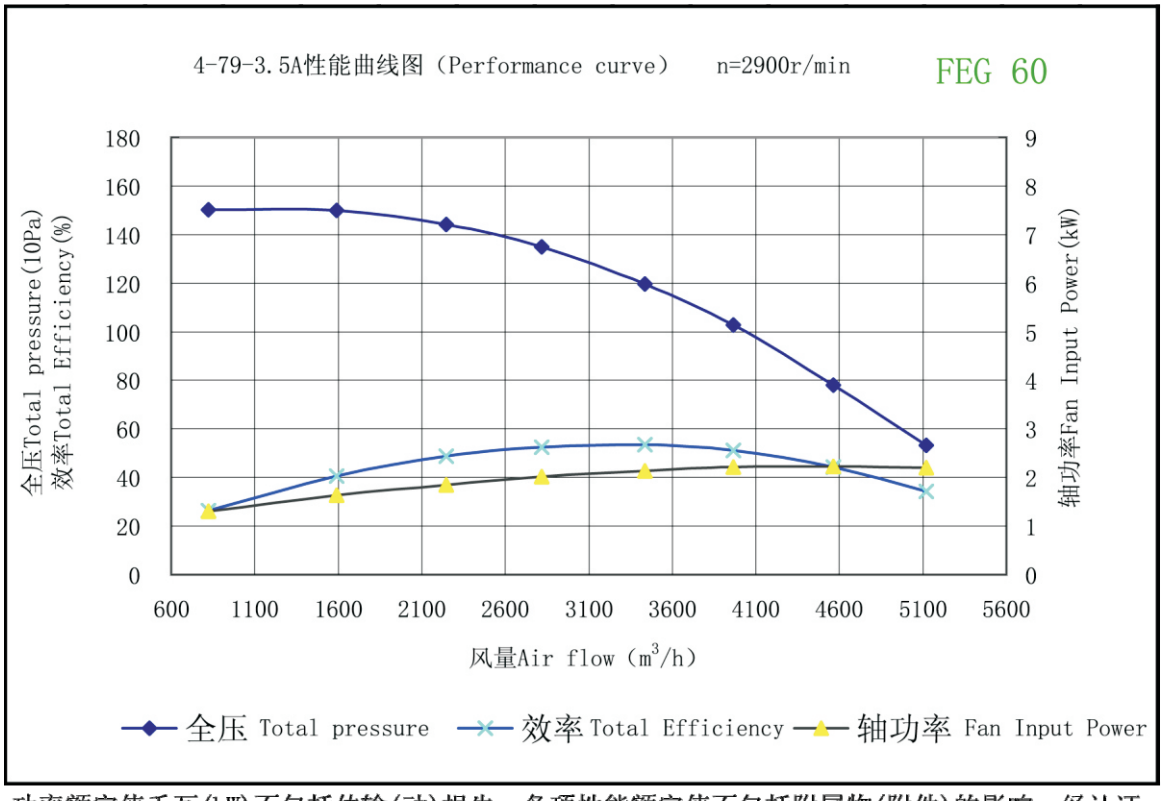

功率额定值千瓦(kW)不包括传输(动)损失。各项性能额定值不包括附属物(附件)的影响。经认证的性能是B类安装-自由入口，管道出口。

Power rating (kW) does not include transmission losses. Performance ratings do not include the effects of appurtenances (accessories). Performance certified is for installation type B-Free inlet, Ducted outlet.

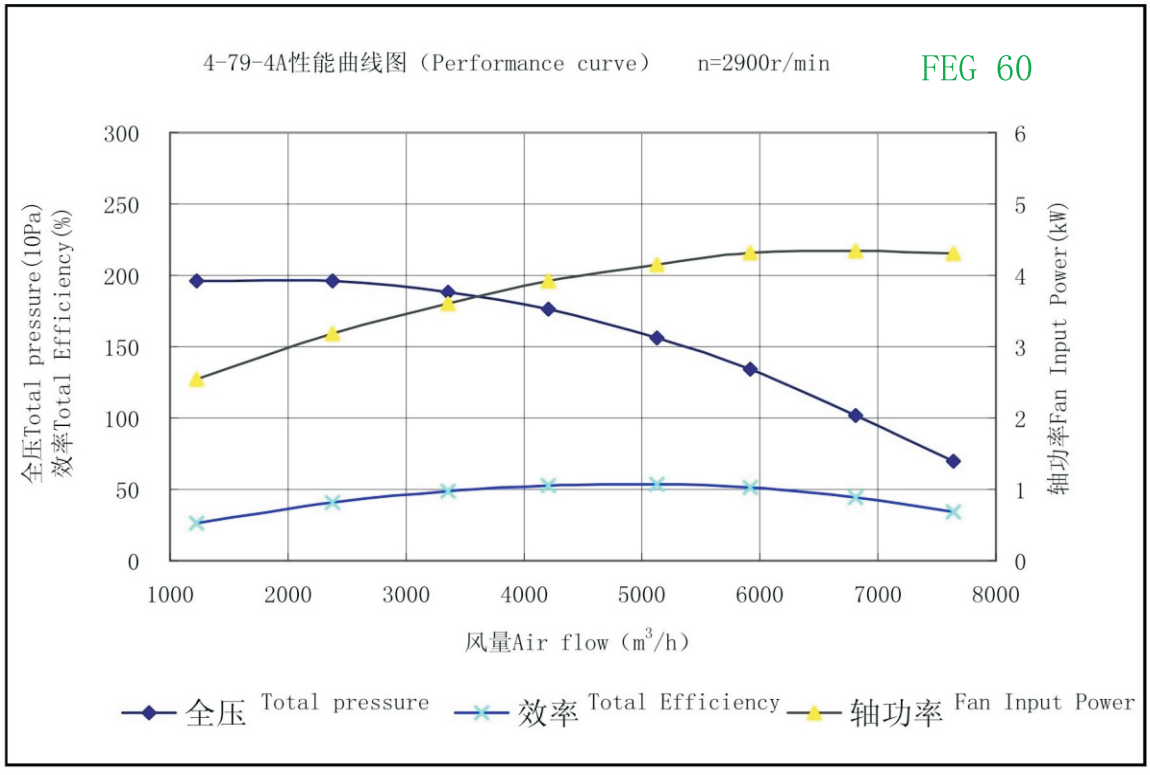

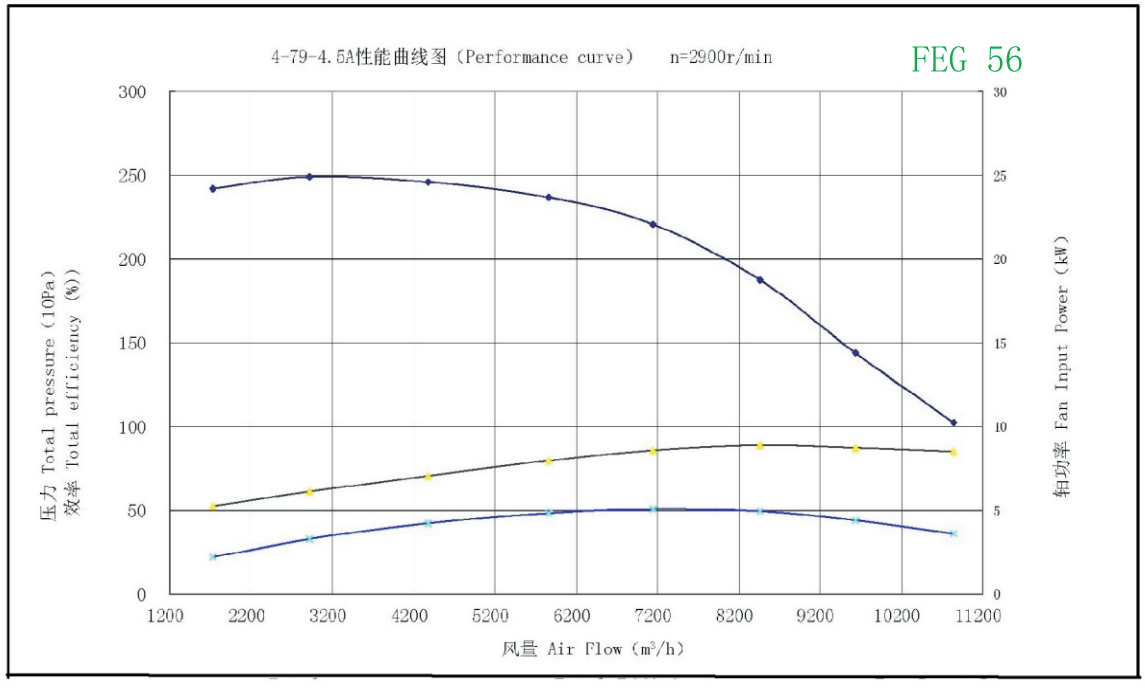

功率额定值千瓦(kW)不包括传输(动)损失。各项性能额定值不包括附属物(附件)的影响。经认证的性能是B类安装-自由入口，管道出口。

Power rating (kW) does not include transmission losses. Performance ratings do not include the effects of appurtenances (accessories). Performance certified is for installation type B-Free inlet, Ducted outlet.

4-79-5A性能曲线图（Performance curve） n=2900r/min FEG 56

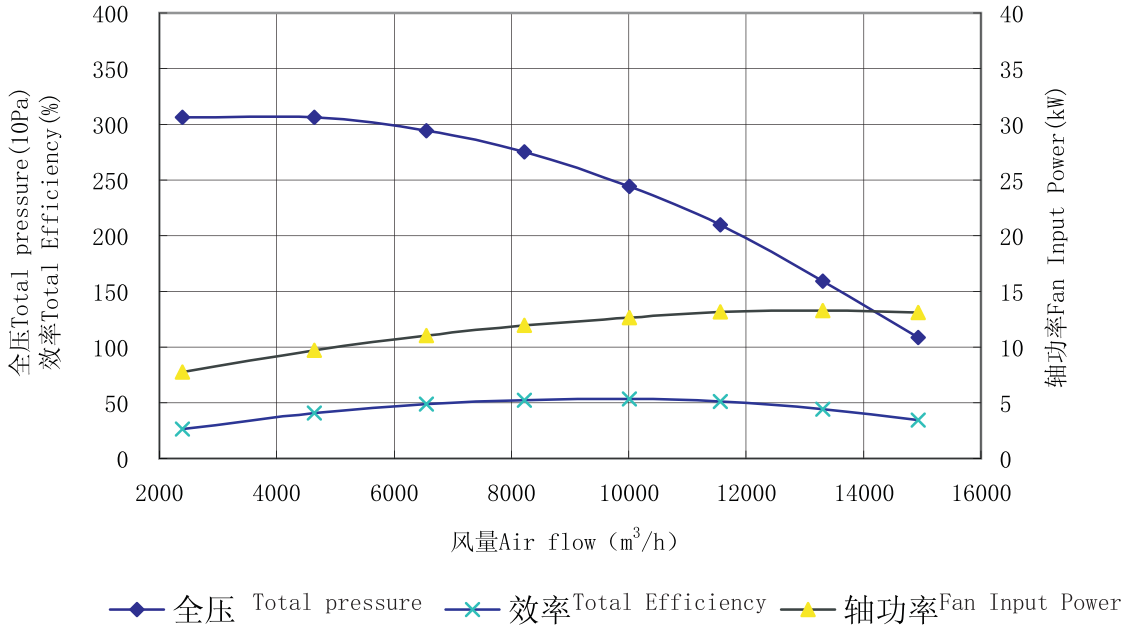

4-79-6A性能曲线图（Performance curve） n=1450r/min FEG 56

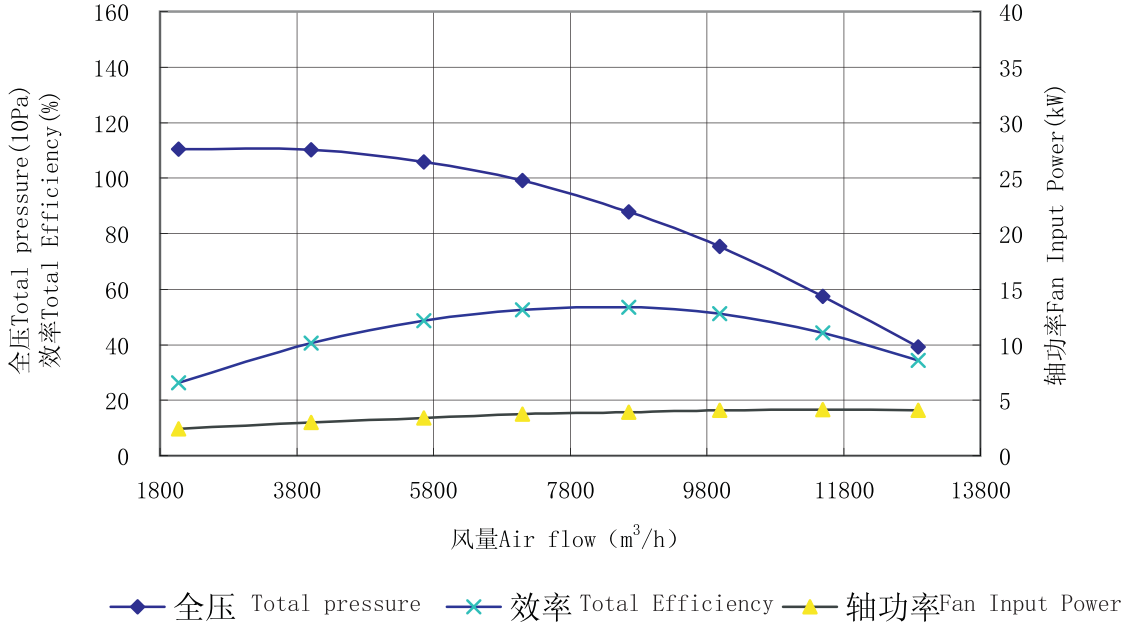

功率额定值千瓦(kW)不包括传输(动)损失。各项性能额定值不包括附属物(附件)的影响。经认证的性能是B类安装-自由入口，管道出口。

Power rating (kW) does not include transmission losses. Performance ratings do not include the effects of appurtenances (accessories). Performance certified is for installation type B-Free inlet, Ducted outlet.

4-79-7C性能曲线图（Performance curve）　n=1120r/min　FEG 71

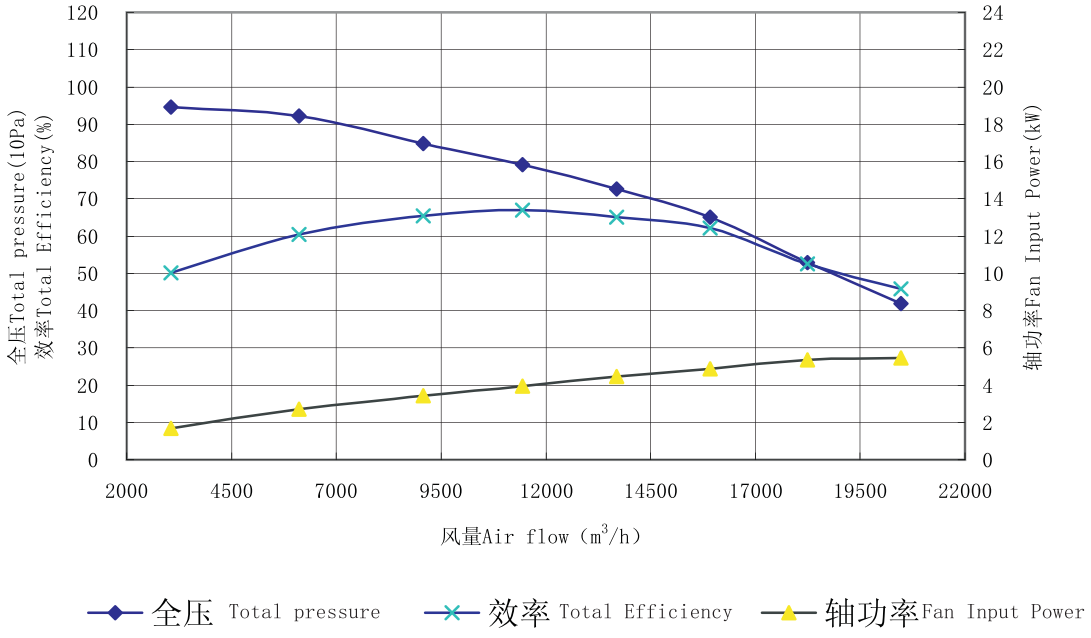

4-79-8C性能曲线图（Performance curve）　n=1120r/min　FEG 71

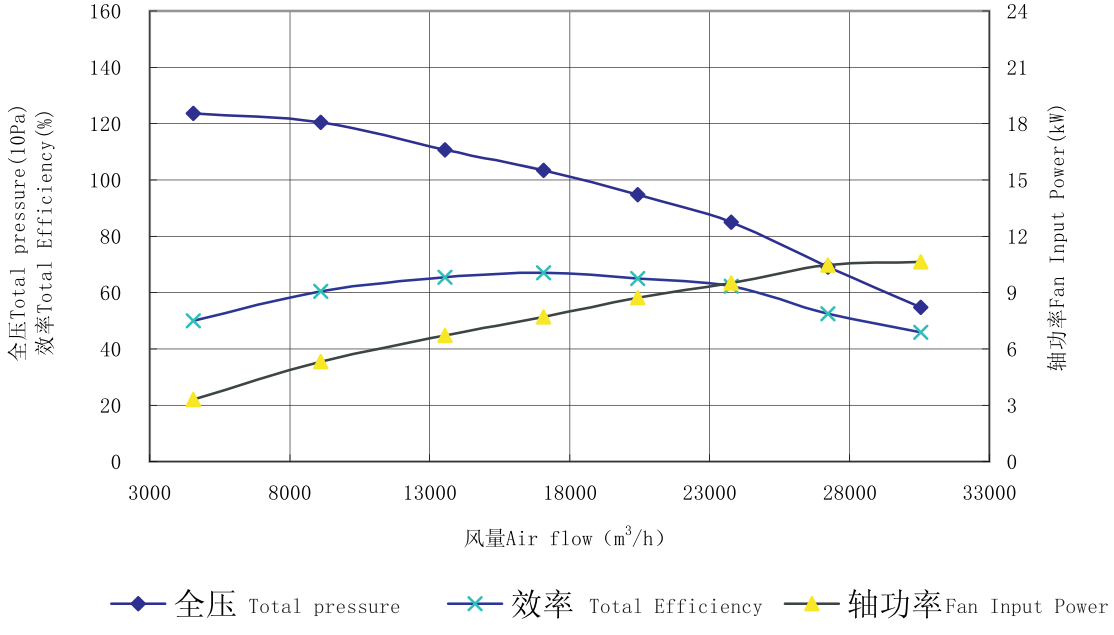

功率额定值千瓦(kW)不包括传输(动)损失。各项性能额定值不包括附属物(附件)的影响。经认证的性能是B类安装-自由入口，管道出口。

Power rating (kW) does not include transmission losses. Performance ratings do not include the effects of appurtenances (accessories). Performance certified is for installation type B-Free inlet, Ducted outlet.

4-79-10E性能曲线图（Performance curve） n=1000r/min FEG 71

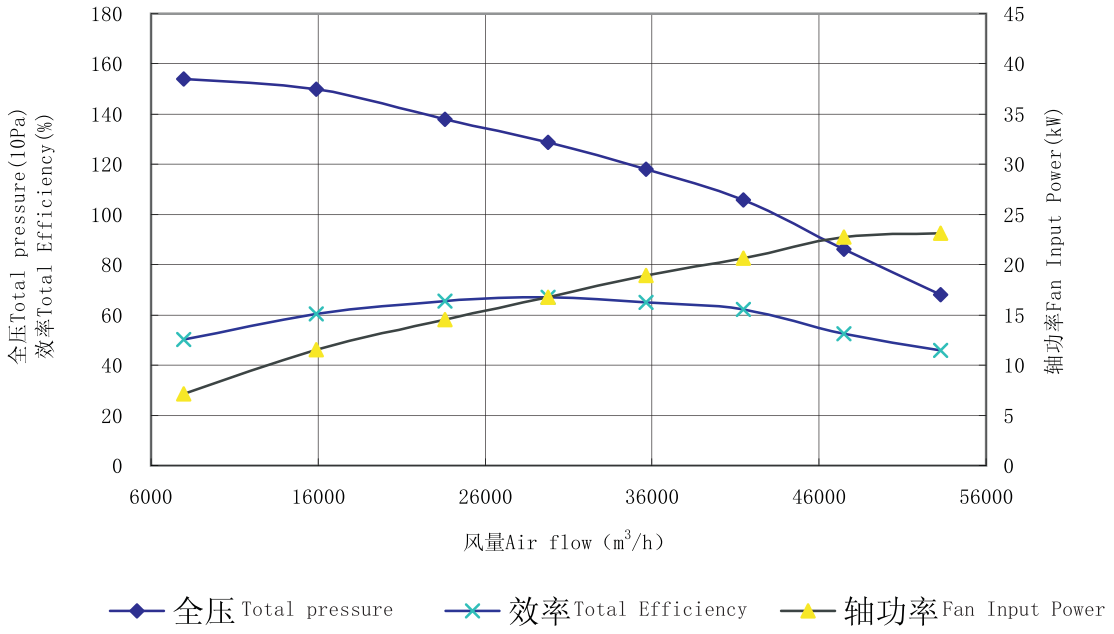

4-79-12E性能曲线图（Performance curve） n=830r/min FEG 71

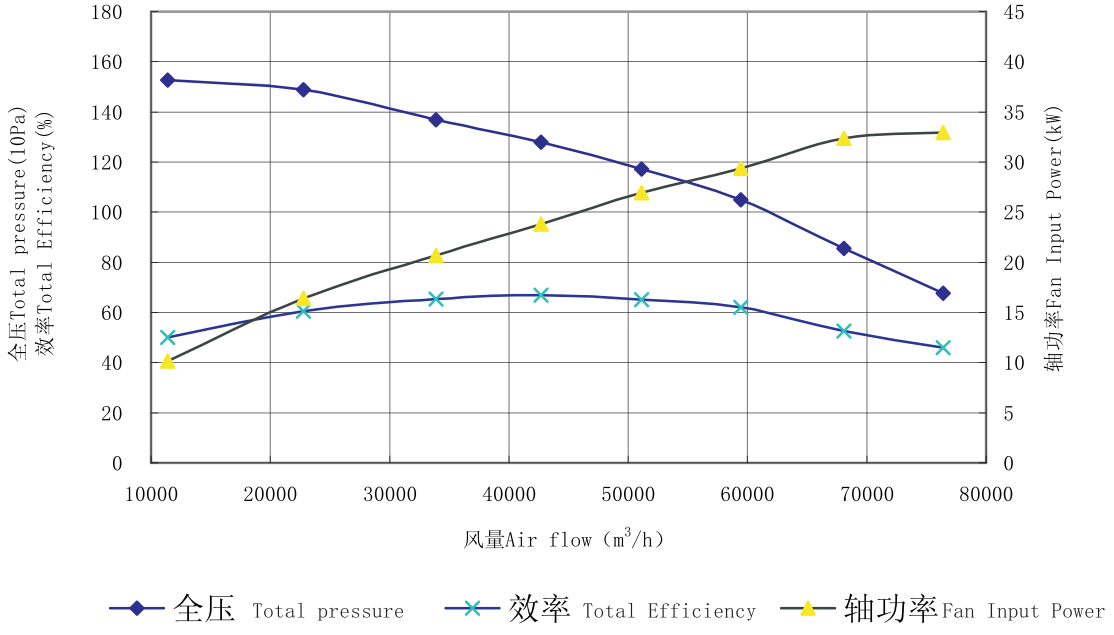

功率额定值千瓦(kW)不包括传输(动)损失。各项性能额定值不包括附属物(附件)的影响。经认证的性能是B类安装-自由入口，管道出口。

Power rating (kW) does not include transmission losses. Performance ratings do not include the effects of appurtenances (accessories). Performance certified is for installation type B-Free inlet, Ducted outlet.

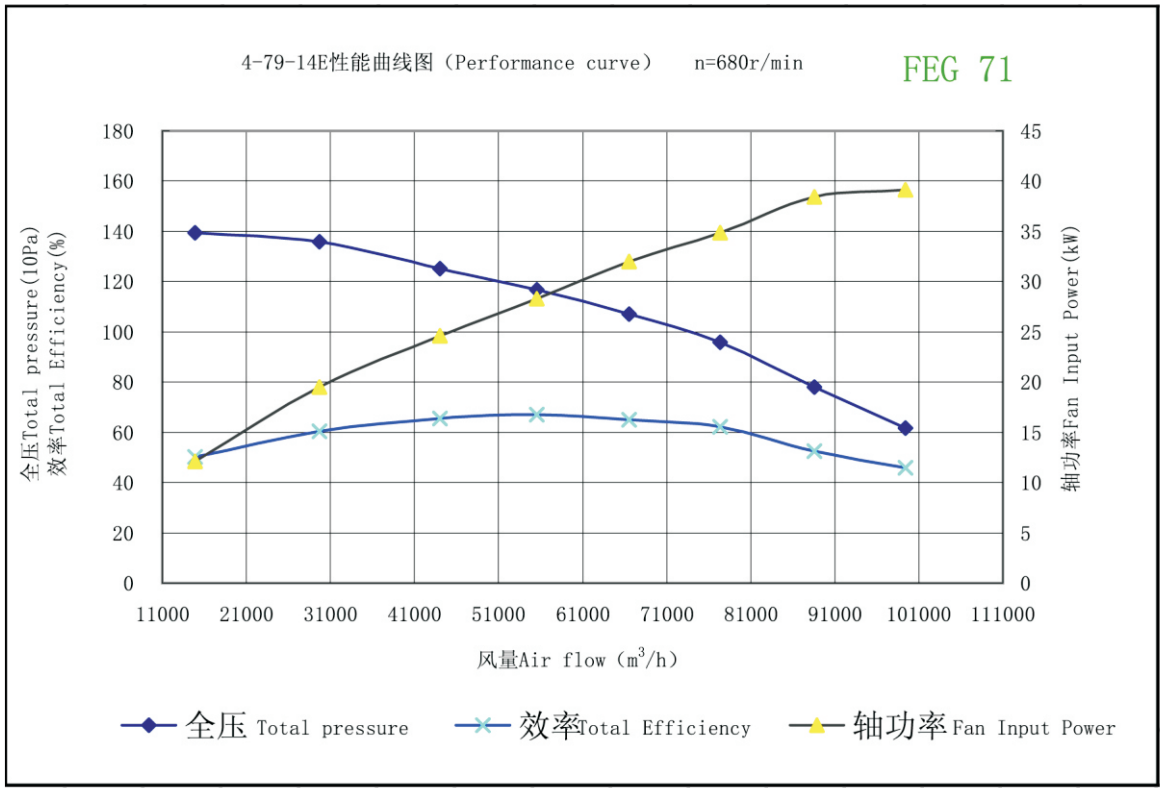

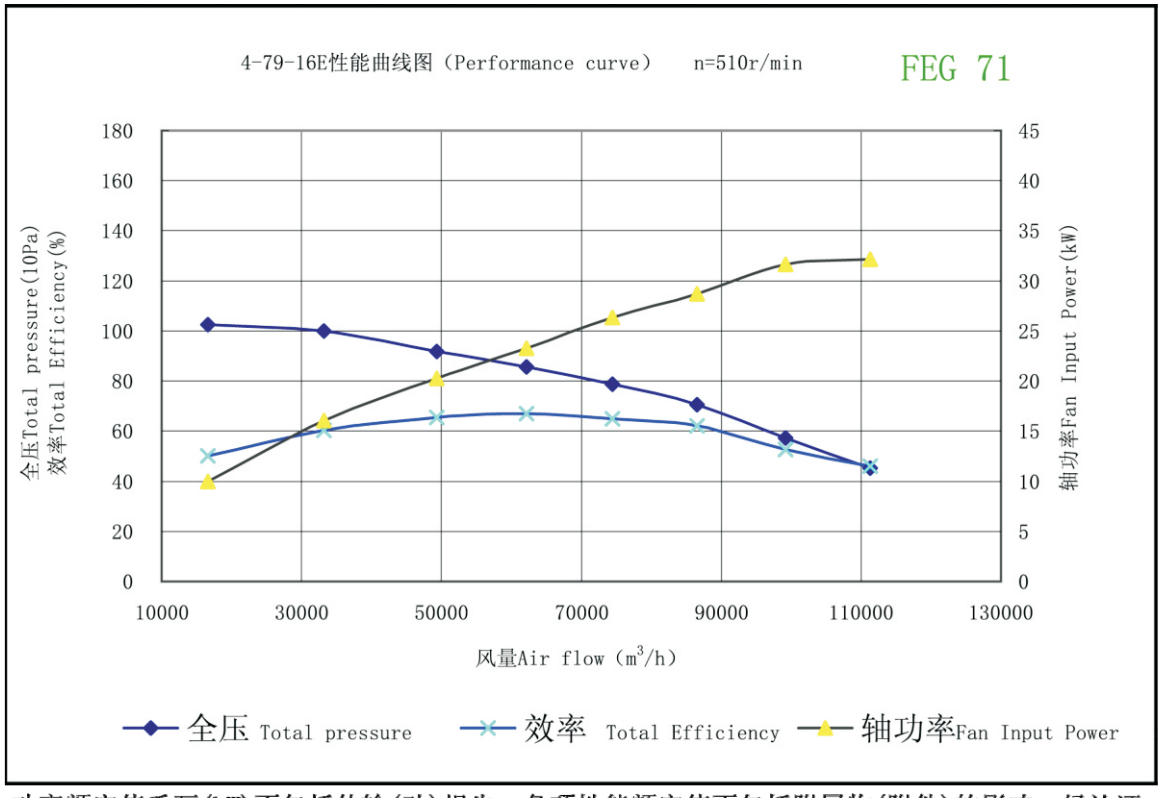

功率额定值千瓦(kW)不包括传输(动)损失。各项性能额定值不包括附属物(附件)的影响。经认证的性能是B类安装-自由入口，管道出口。

Power rating (kW) does not include transmission losses. Performance ratings do not include the effects of appurtenances (accessories). Performance certified is for installation type B-Free inlet, Ducted outlet.

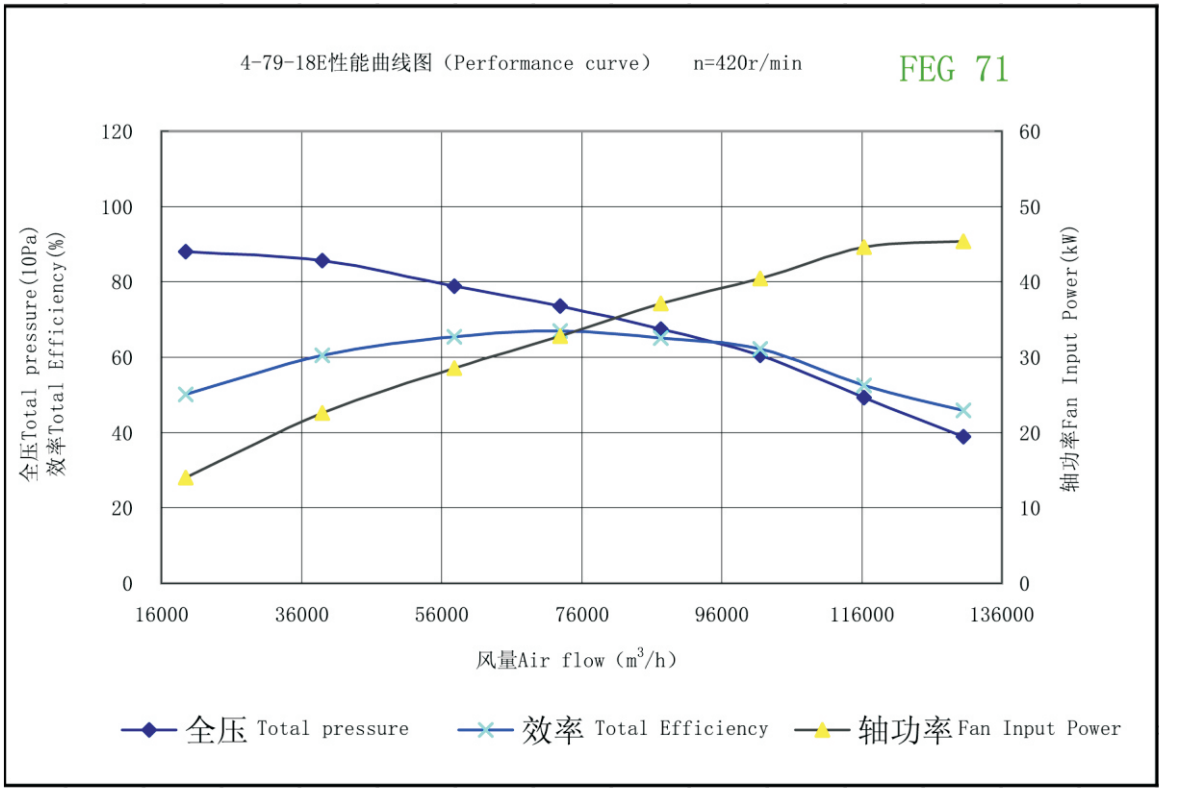

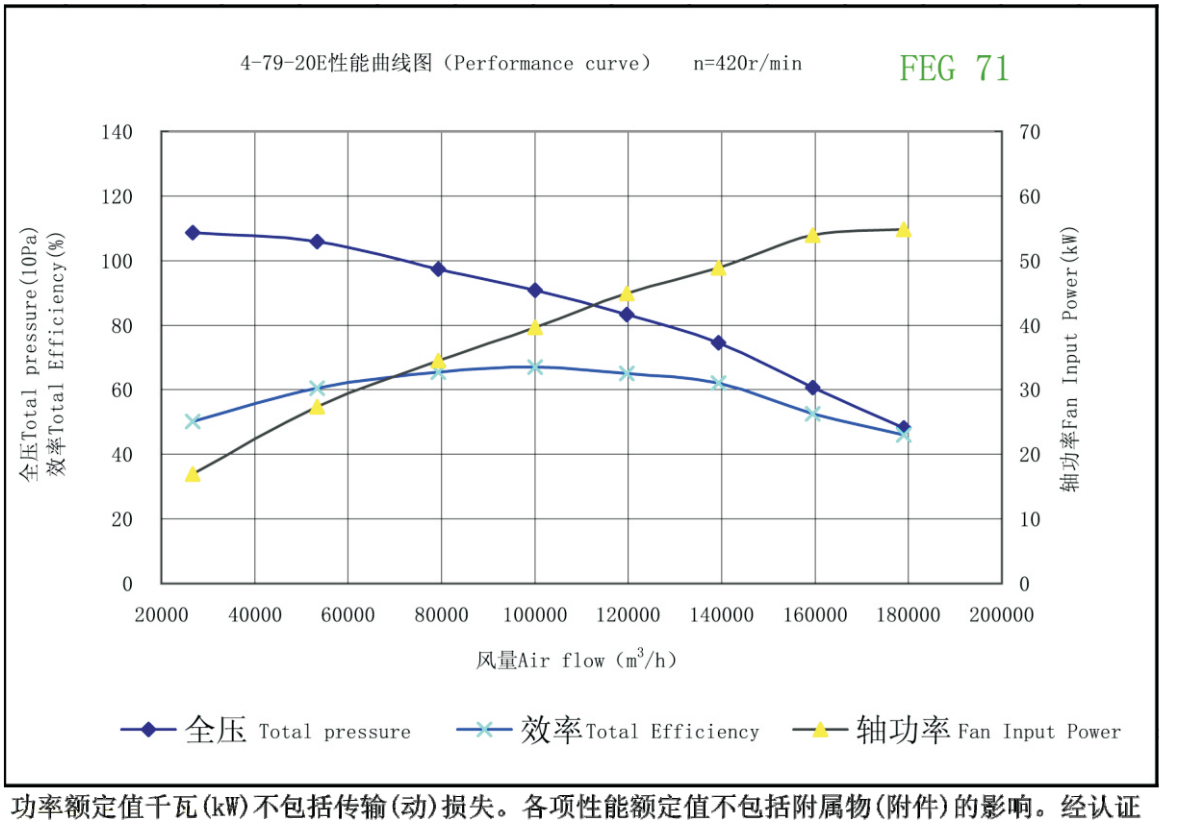

功率额定值千瓦(kW)不包括传输(动)损失。各项性能额定值不包括附属物(附件)的影响。经认证的性能是B类安装-自由入口，管道出口。

Power rating (kW) does not include transmission losses. Performance ratings do not include the effects of appurtenances (accessories). Performance certified is for installation type B-Free inlet, Ducted outlet.

4-79 №3、3.5、4、4.5、5、6 离心通风机安装及外形尺寸 Installation and Dimensions of Centrifugal Fan

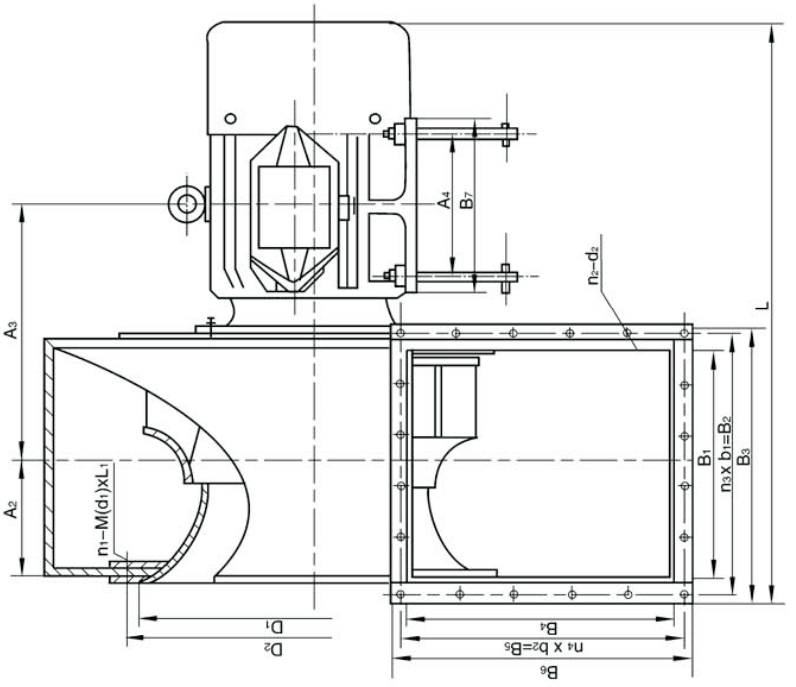

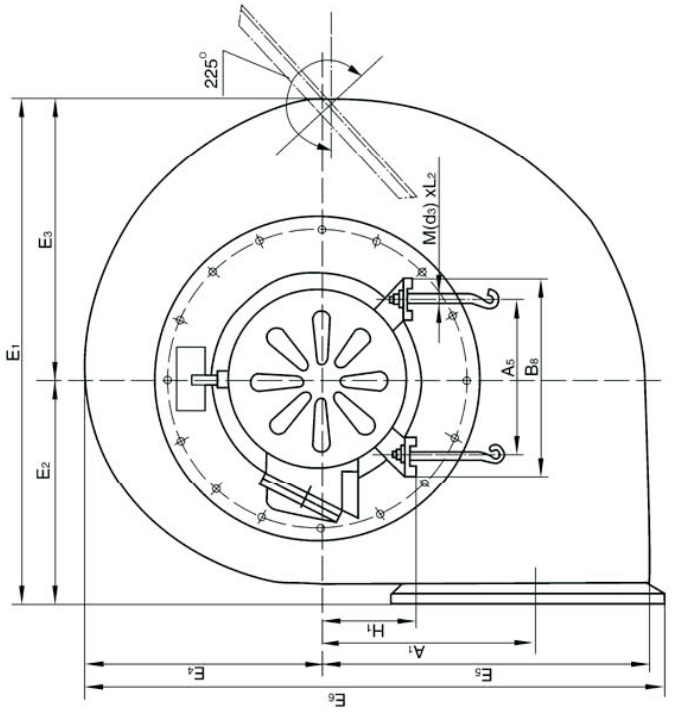

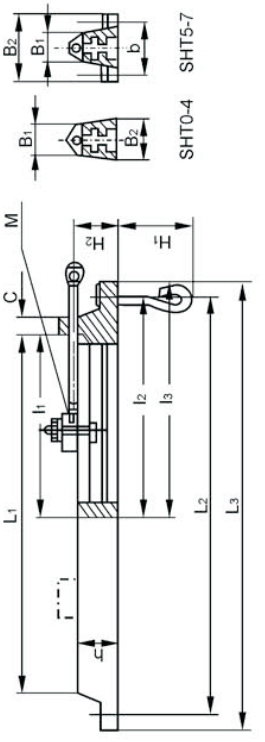

4-79 №3、3.5、4、4.5、5、6 离心通风机安装及外形尺寸 Installation and Dimensions of Centrifugal Fan

	L_1	L_2	L_3	I_1	I_2	I_3	C	h	H_1	H_2	B_1	B_2	地脚螺栓 footing screw	调节螺钉 adjusting screw	T 型槽螺栓 T-type grooved screw	b
SHT-0	300	360	390	150	190	205	20	34	170	42	34	40	M10	M12×140	M8	
SHT-1	400	460	490	200	240	255	20	36	170	44	38	42	M10	M12×140	M10	
SHT-2	520	580	620	260	300	320	20	45	215	55	45	50	M12	M12×180	M12	
SHT-3	640	725	785	320	375	405	25	60	270	74	65	75	M16	M16×220	M16	
SHT-4	820	950	1010	410	490	520	30	70	340	88	90	105	M20	M20×260	M20	
SHT-5	940	745	1035	470	372.5	535	35	85	480	105	110	260	M24	M24×300	M24	190
SHT-6	1100	890	1210	550	445	625	40	90	420	115	150	300	M24	M24×300	M24	230
SHT-7	1400	1145	1525	700	573	785	45	100	530	135	150	320	M30	M30×420	M30	240

机号 №		进风口 Air inlet				出风口 Air outlet									
		D_1	D_2	连接螺栓 connecting screw		B_1	B_2	B_3	B_4	B_5	B_6	螺栓孔 screw holes			
				规格 $M(d_1)$	个数 n_1							直径 diameter d_2	个数 amount n_2	间距 space between n_3-b_1	n_4-b_2
№3	Y90S-2	Φ300	Φ335	M6	8	198	234	264	272	306	336	Φ7	10	2×117	3×102
	Y802-4														
№3.5	Y100L-2	Φ350	Φ385	M6	16	231	258	297	318	345	382	Φ7	10	2×129	3×115
	Y90S-4														
№4	$Y132S_1-2$	Φ400	Φ445	M6	16	264	297	330	362	396	426	Φ7	14	3×99	4×99
	Y90S-4														
№4.5	$Y160M_1-2$	Φ450	Φ500	M8	16	297	332	363	409	440	473	Φ8.5	18	4×83	5×88
	Y90L-4														
№5	$Y160M_2-2$	Φ500	Φ560	M8	16	330	372	418	454	498	540	Φ8.5	20	4×93	6×83
	Y100L1-4														
№6	Y132S-4	Φ600	Φ650	M8	16	396	440	484	545	588	631	Φ10	22	5×88	6×98
	Y100L-6														

机号 №		安装及外形尺寸 installation and contour dimensions																叶轮重 Vane weight kg	风机净重 Fan weight kg	电机重 Motor weight kg
		A_1	A_2	A_3	A_4	A_5	B_7	B_8	E_1	E_2	E_3	E_4	E_5	E_6	H_1	地脚螺栓 Footing screws $M(d_3)$	L			
№3	Y90S-2	207	99	225	100	140	130	180	536	234	302	253	328	606	90	M8	519	7	22	19
	Y802-4			219	100	125	130	160							80	M8	504			18
№3.5	Y100L-2	242	116	271.5	140	160	176	205	626	273	353	295	382	703	100	M10	618	8.8	31	32
	Y90S-4			244.5	100	140	130	180							90	M8	583			19
№4	$Y132S_1-2$	276	132	318	140	216	200	280	715	312	403	338	437	804	132	M10	737	20.2	59	45
	Y90S-4			265	100	140	130	180							90	M8	702			19
№4.5	$Y160M_1-2$	311	149	391.5	210	254	270	325	804	351	453	380	491	901	160	M12	871	23.6	71	117
	Y90L-4			297	125	140	155	180							90	M8	666			24
№5	$Y160M_2-2$	345	165	411	210	254	270	325	894	390	504	422	546	1008	160	M12	920	27	85	125
	Y100L1-4			331	140	160	176	205							100	M10	750			32
№6	Y132S-4	414	198	396	140	216	200	280	1073	468	605	506	655	1201	132	M10	906	45	161	56
	Y100L-6			370	140	160	176	205							100	M10	831			32

4-79 №7、8 离心通风机安装及外形尺寸 Installation and Dimensions of Centrifugal Fan

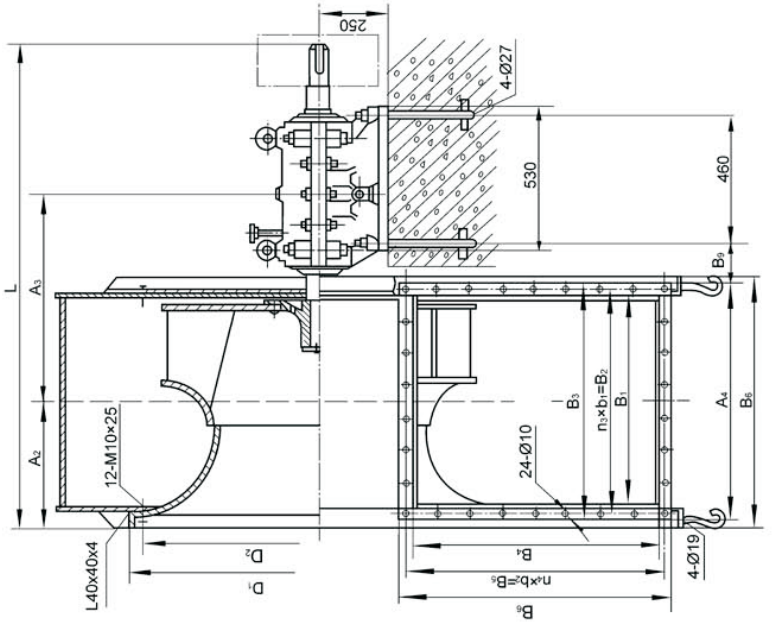

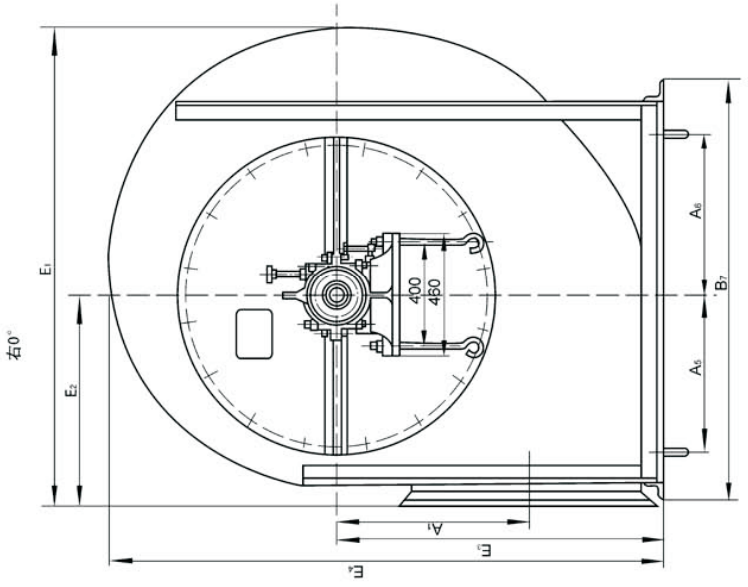

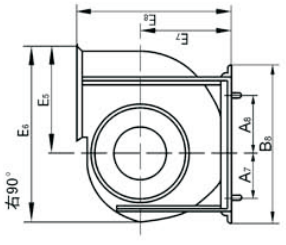

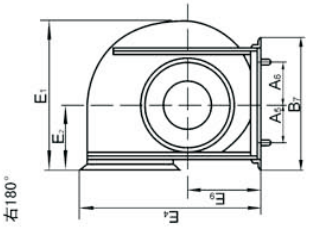

4-79 №7、8 离心通风机安装及外形尺寸 Installation and Dimensions of Centrifugal Fan

机号 №	进风口 Air inlet		出风口 Air outlet						
	D_1	D_2	B_1	B_2	B_3	B_4	B_5	连接螺栓孔间距 Connecting screw holes space between	
								$n_3 \times b_1$	$n_4 \times b_2$
№7	Φ800	Φ700	462	520	570	636	686	5×104	7×98
№8	Φ900	Φ800	528	575	636	726	770	5×115	7×110

机号 №	安装及外形尺寸 Installtion and contour dimensions													
	A_1	A_2	A_3	A_4	A_5	A_6	A_7	A_8	B_6	B_7	B_8	B_9	E_1	E_2
№7	483	291	643	622	305	370	330	400	740	975	1030	149	1261	546
№8	552	324	673	700	368	415	390	470	830	1083	1160	140	1440	624

机号 №	安装及外形尺寸 Installtion and contour dimensions										叶轮重 Vane weight kg	风机重（不含电机）Fan weight (not including motor) kg
	E_3	E_4	E_5	E_6	E_7	E_8	E_9	L	地脚螺栓 Footing screws			
									$M(d_3)$	$M(d_4)$		
№7	834	1435	804	1405	745	1291	631	1475	M24	M16	68.5	420
№8	944	1629	914	1599	846	1470	715	1544	M24	M16	78	510

4-79 №10、12、14、16、18、20 离心通风机安装及外形尺寸 Installation and Dimensions of Centrifugal Fan

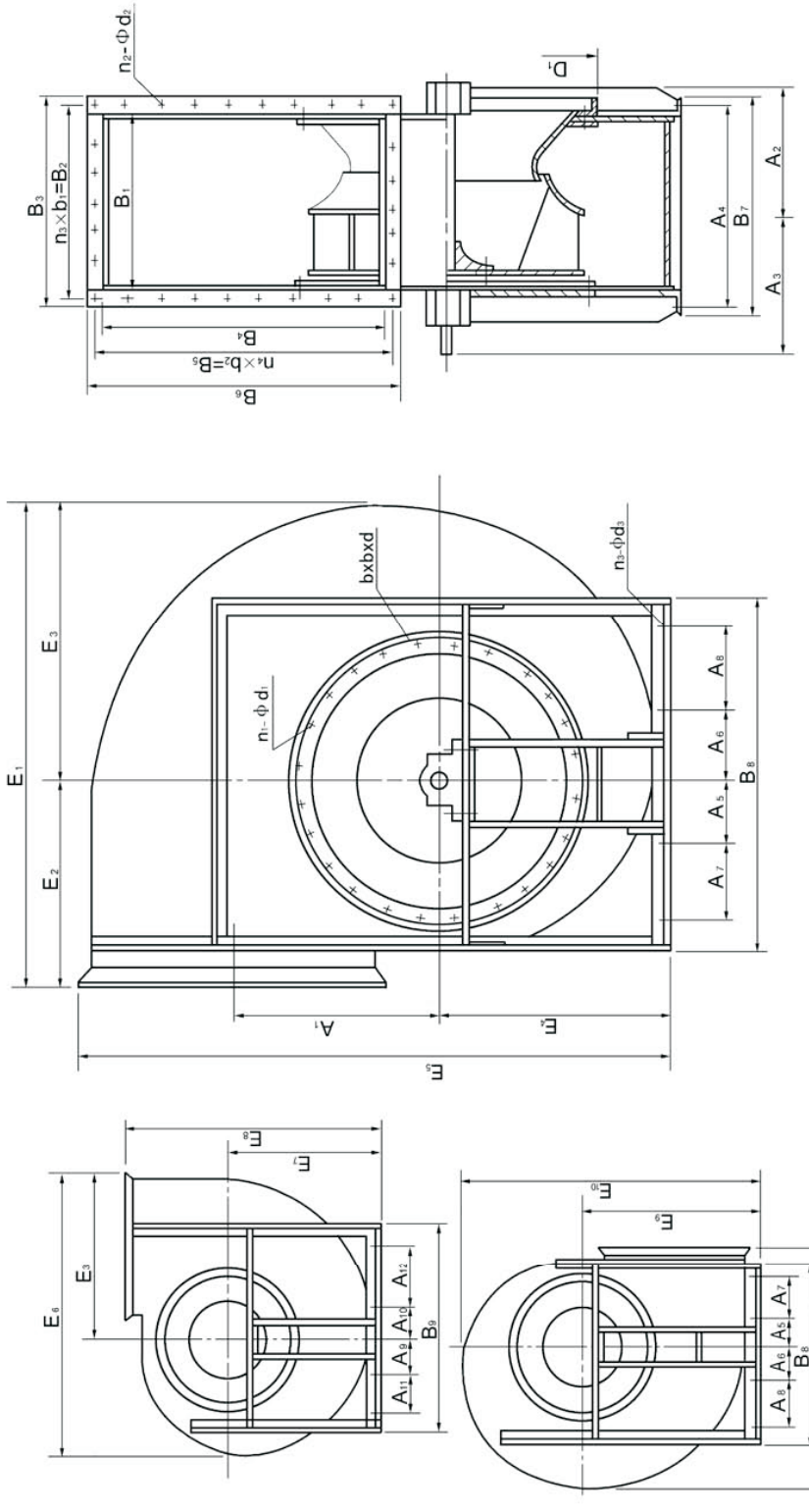

4-79 №10、12、14、16、18、20 离心通风机安装及外形尺寸 Installation and Dimensions of Centrifugal Fan

机号 №	进风口 Air inlet			出风口 Air outlet								
	D_1	b×b×d	连接螺栓孔 Connecting screw holes n1-Φd1	B_1	B_2	B_3	B_4	B_5	B_6	连接螺栓孔 Connecting screw holes n_2-Φd_2	间距 Space between n_3×b_1	间距 Space between n_4×b_2
№10	Φ1140	50×50×5	16-Φ15	660	714	768	908	968	1014	28-Φ12	6×119	8×121
№12	Φ1340	50×50×5	20-Φ15	792	854	900	1089	1150	1196	34-Φ12	7×122	10×115
№14	Φ1580	63×63×6	24-Φ15	924	973	1032	1271	1310	1379	34-Φ12	7×139	10×131
№16	Φ1780	63×63×6	24-Φ15	1056	1134	1186	1453	1512	1581	42-Φ12	9×126	12×126
№18	Φ1990	63×63×6	24-Φ15	1188	1260	1318	1634	1694	1762	48-Φ12	10×126	14×121
№20	Φ2200	63×63×6	24-Φ15	1320	1392	1450	1816	1888	1946	56-Φ12	12×116	16×118

机号 №	安装及外形尺寸 Installtion and contour dimensions																
	A_1	A_2	A_3	A_4	A_5	A_6	A_7	A_8	A_9	A_{10}	A_{11}	A_{12}	B_7	B_8	B_9	E_1	E_2
№10	690	465	691	870	180	260	380	380	150	290	400	400	930	1515	1606	1797	780
№12	828	543	805	1026	180	260	500	500	160	340	500	500	1086	1774	1880	2154	936
№14	966	716	999	1192	305	395	500	500	160	440	600	600	1272	2068	2230	2565	1092
№16	1104	794	1135	1348	315	405	600	600	175	525	700	700	1428	2322	2510	2922	1248
№18	1242	913	1203	1544	250	450	800	700	160	540	800	800	1654	2656	2826	3280	1404
№20	1380	985	1286	1700	410	490	800	800	220	630	850	850	1810	2890	3100	3649	1560

机号 №	安装及外形尺寸 Installtion and contour dimensions									叶轮重 Vane weight kg	风机重（不含电机）Fan weight (not including motor) kg
	E_3	E_4	E_5	E_6	E_7	E_8	E_9	E_{10}	n_3-Φd_3		
№10	1133	894	2026	1986	1057	1837	1192	2046	8-Φ18	119	890
№12	1360	1063	2423	2383	1258	2194	1420	2443	8-Φ18	309	1130
№14	1592	1232	2811	2847	1460	2552	1659	2851	8-Φ26	619	2069
№16	1810	1400	3210	3223	1661	2909	1877	3237	8-Φ26	737	2474
№18	2029	1579	3608	3611	1873	3277	2116	3645	8-Φ32	1137	3764
№20	2259	1748	4007	3957	2074	3634	2334	4032	8-Φ32	1343	4301

4-79 №3、3.5、4、4.5、5、6 带整体支架外形尺寸 Contour Dimensions with Entirety Rack

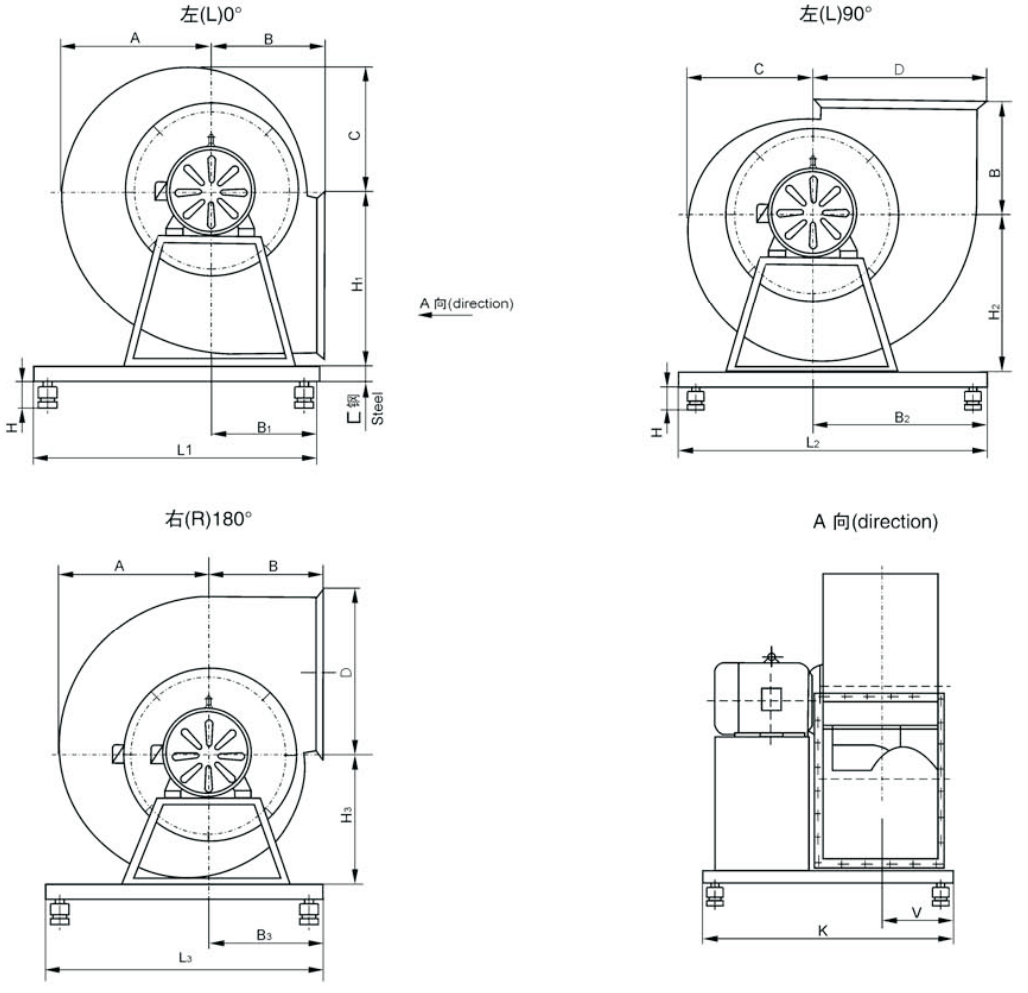

机号 No	A	B	C	D	H_1	H_2	H_3	B_1	B_2	B_3	L_1	L_2	L_3	V	[钢 steel	电机型号 motor model	重量 weight kg	减振器 dampener	数量 amount	H	K
3A	302	234	253	353	373	322	273	184	355	236	488	610	540	144	50	Y90S-2	57	CZT3-2	4	60	524
																Y802-4	51	CZT3-2	4	60	510
3.5A	353	273	295	408	428	373	315	223	410	275	578	707	630	164	50	Y100L-2	81	CZT4-2	4	60	624
																Y90S-4	69	CZT4-2	4	60	588
4A	403	312	338	466	491	428	363	262	468	314	667	808	719	188	50	$Y132S_1$-2	125	CZT3-3	4	70	744
																Y90S-4	100	CZT1-5	4	100	708
4.5A	453	351	380	521	546	478	405	301	523	353	756	905	808	208	50	$Y160M_1$-2	215	CZT3-4	4	80	878
																Y90L-4	125	CZT3-3	4	70	672
5A	504	390	422	586	616	534	452	330	589	393	837	1014	900	238	63	$Y160M_2$-2	255	CZT4-4	4	80	926
																$Y100L_1$-4	161	CZT4-3	4	70	756
6A	605	468	506	695	725	635	536	408	698	471	1016	1207	1079	277	63	Y132S-4	265	CZT4-4	4	80	912
																$Y100L_1$-6	242	CZT4-4	4	80	838

4-79 №7C-8C 带整体支架外形尺寸 Contour Dimensions with Entirety Rack

左(L) 90°

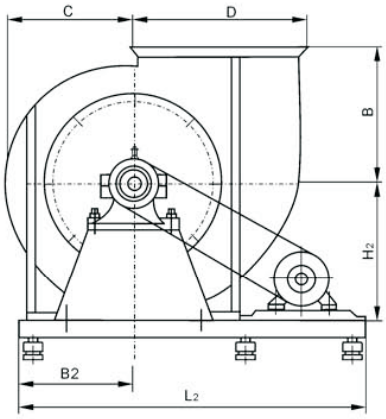

左(L)180°

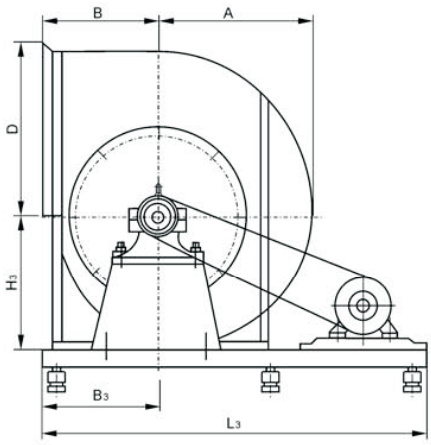

右(R) 0°

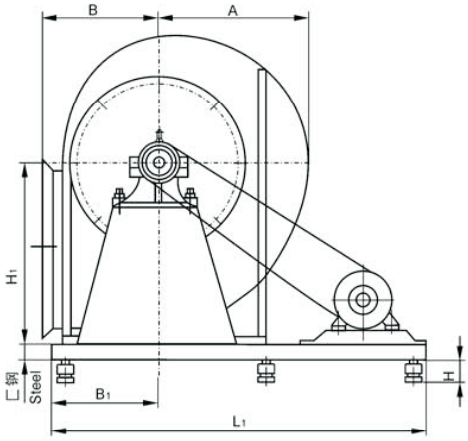

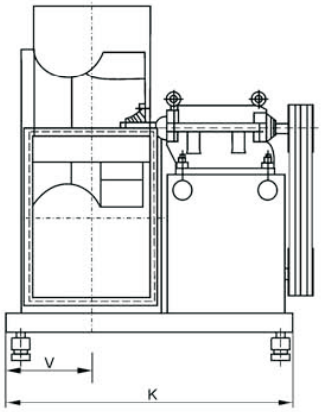

机号 №	A	B	C	D	H_1	H_2	H_3	B_1	B_2	B_3	L_1	L_2	L_3	H	V	[钢 steel	电机型号 motor model	减振器 dampener	数量 amount	K
7C	715	546	601	804	834	745	631	455	480	455	1780	1830	1780	115	330	80	Y180L-4 Y160L-4	CZT3-6	6	1470
											1615	1675	1615				Y132M、S-4 Y100L$_1$、L$_2$-4 Y112M-4			
8C	816	624	685	914	944	846	715	518	540	518	2100	2180	2100	150	369	80	Y200L-4	CZT1-10	6	1540
											1900	1965	1900				Y160L-4 Y160M-4			
											1720	1800	1720	115			Y132M、S-4 Y100L$_2$-4 Y112M-4	CZT3-6		

注:1、H 尺寸为减振器原始高度;2、左 0°、右 90°、左 180°外形与本图册成镜像布置(接线盒位置除外)。

Notes: 1、H value is the original height of shock absorber;

2、The confturation of L°、R90°、L180° is arranged in mirror effect with respect to that in the sample book(except for the position of wiring case)

4-79 №10E-20E 带整体支架外形尺寸 Contour Dimensions with Entirety Rack

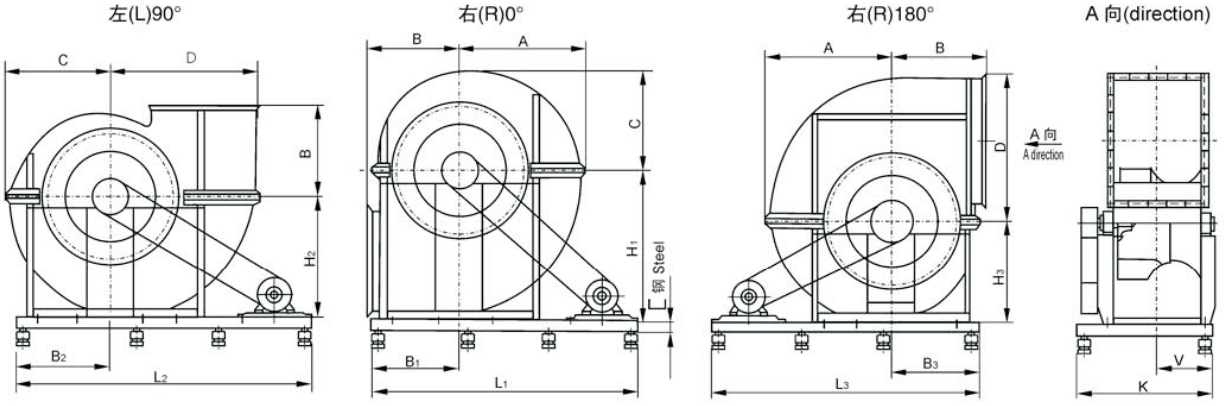

型号 Model	A	B	C	D	H_1	H_2	H_3	B_1	B_2	B_3	V	K	[钢 steel
10E	1017	780	853	1133	1192	1057	894	717	733	717	458	1210	10
12E	1218	936	1023	1360	1420	1258	1063	847	850	847	536	1400	12
14E	1473	1092	1255	1592	1659	1460	1232	989	975	989	620	1680	14
16E	1674	1248	1413	1810	1877	1661	1400	1116	1080	1116	702	1900	16
18E	1876	1404	1582	2029	2126	1873	1579	1278	1223	1278	800	2100	18
20E	2089	1560	1698	2259	2334	2074	1748	1405	1345	1405	882	2260	20

机号 №	电机型号 motor model	L_1	L_2	L_3	减振器 dampener		
					型号 Model	数量 amount	H
10E	Y250M-4	2675	2725	2675	CZT44-64	8	115
	Y225S-4	2450	2510	2450	CZT33-64		
	Y180L-4 Y180M-4 Y160L-4 Y160M-4 Y160M-6	2285	2365	2285			
	$Y132M_2$-4	2150	2240	2150	CZT4-6		
12E	Y280S-4 Y250M-4 Y250M-6	2960	3010	2960	CZT3-8	8	140
	$Y200L_2$-6 $Y200L_1$-6	2700	2760	2700	CZT44-64		115
	Y160L-6 Y160M-6	2520	2600	2520			
	$Y132M_2$-6	2380	2470	2380	CZT33-64		
14E	Y315S-6	3400	3400	3500	CZT3-10	8	150
	Y280M-6 Y250M-6	3360	3360	3460	CZT44-85		140
	$Y200L_2$-6 $Y200L_1$-6	3130	3130	3230	CZT4-8		
	Y180L-6 Y160L-6	2960	2960	3060			

机号 №	电机型号 motor model	L_1	L_2	L_3	减振器 dampener		
					型号 Model	数量 amount	H
16E	$Y315M_1$-6 Y315S-6	3700	3700	3760	CZT4-10	8	150
	Y280M-6 Y250M-6	3640	3640	3700	CZT3-10		
	Y250M-6 $Y200L_1$-6	3410	3410	3470			
	Y180L-6	3250	3250	3310	CZT44-85		140
18E	$Y315M_2$-6 $Y315M_1$-8 Y315S-8	3930	3940	4000	CZT44-106	8	150
	Y250M-8 Y280M-8	3870	3870	3930	CZT4-10		
	Y225M-8 Y200L-8	3650	3650	3720			
20E	Y355M-8	4550	4550	4580	CZT33-128	8	170
	$Y315L_1$-8 $Y315M_1$-8 Y315S-8	4400	4400	4450	CZT44-106		150
	Y280S-8 Y250M-8	4350	4350	4400			

注:1、H 尺寸为减振器原始高度;2、左 0°、右 90°、左 180°外形与本图册成镜像布置(接线盒位置除外)。

Notes: 1、H value is the original height of shock absorber;

2、The configuration of LO°、R90°、L180° is arranged in mirror effect with respect to that in the sample book(except for the position of wiring case)

浙江金盾风机装备有限公司
ZHEJIANGJINDUN FANS EQUIPMENT CO., LTD.

地址（Add）：浙江省绍兴市上虞区章镇工业园区
内销热线（Tel）：0575-82719999 82718888
82034999
传真（Fax）：0575-82719706 82034555
网址（http）：//www.jindunfan.com
邮箱（E-mail）：jindun@zjjd.com.cn

海外代表办事处
Overseas Representative Office
SSF国际商贸私人有限公司
SSF International Trade Pte.Ltd.
Tel:（65）6754 5123 / 6754 0200
Fax:（65）6754 6263
E-mail:ssfengrg@singnet.com.sg

离心风机4-79 2019年1月印刷
Centrifugal 4-79. January 2019